WATER EMERGENCY TRANSPORTATION AUTHORITY PASSENGER FLOAT

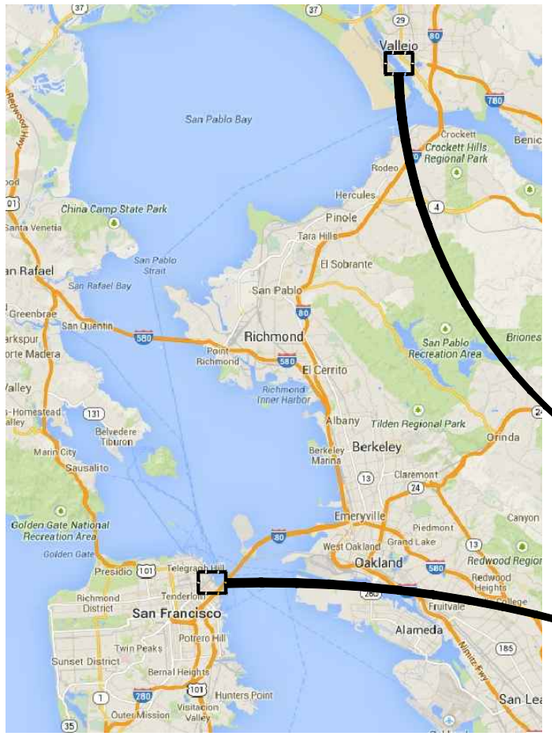

VICINITY MAP

VALLEJO LOCATION MAP

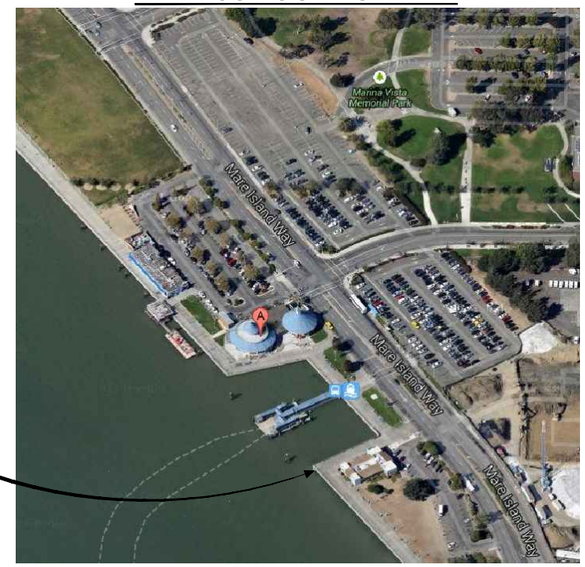

SAN FRANCISCO LOCATION MAP

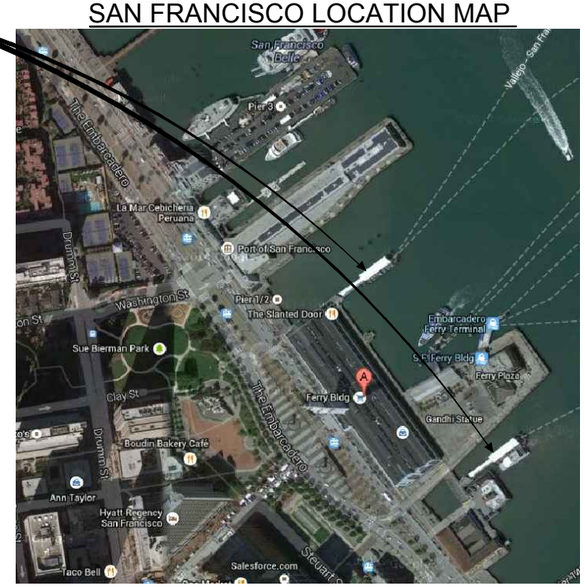

PROJECT CONTACTS	
OWNER WETA PIER 9, SUITE 111, THE EMBARCADERO SAN FRANCISCO, CA. 94111 CONTACT: CHAD MASON TEL (415) 364-1745 FAX (415) 291-3388	TENANT SAN FRANCISCO BAY FERRY 477 WATERFRONT AVENUE VALLEJO, CA 94592 CONTACT: MARTIN ROBBINS TEL (415) 726-0356 FAX (707) 562-3141
OPERATOR BLUE & GOLD FLEET 477 WATERFRONT AVENUE VALLEJO, CA 94592 CONTACT: PETER BELDEN TEL (415) 850-0413 FAX (707) 562-3141	ENGINEER/ARCHITECT KPFF CONSULTING ENGINEERS 1601 5TH AVENUE, SUITE 1600 SEATTLE, WA 98101 CONTACT: FRANK PETRIE TEL (206) 926-0514 FAX (206) 622-8130

DRAWING INDEX

SHEET NO.	DRAWING NO.	TITLE
1	G1	TITLE SHEET, MAPS & DRAWING INDEX
2	G2	GENERAL NOTES, ABBREVIATIONS & LEGEND
3	G3	GENERAL ARRANGEMENT – DECK PLAN
4	G4	GENERAL ARRANGEMENT – ELEVATION
5	G5	STRIPING AND SIGNAGE PLAN
6	G6	MOORING ARRANGEMENT – GEMINI
7	G7	MOORING ARRANGEMENT – INTINTOLI
8	G8	MOORING ARRANGEMENT – VALLEJO
9	G9	MOORING ARRANGEMENT – PERALTA
10	G10	MOORING ARRANGEMENT – BAY BREEZE
11	S1	STRUCTURAL NOTES
12	S2	STRUCTURAL PLANS
13	S3	STRUCTURAL ELEVATIONS
14	S4	STRUCTURAL ELEVATIONS
15	S5	STRUCTURAL PLAN – MISCELLANEOUS STEEL
16	S6	SUPERSTRUCTURE PLAN & ELEVATIONS
17	S7	GUIDE PILE COLLAR DETAILS
18	S8	HULL STEEL DETAILS
19	S9	HULL STEEL DETAILS
20	S10	KNEE FENDER DETAILS
21	S11	MISCELLANEOUS DETAILS
22	S12	GANGWAY SUPPORT DETAILS
23	S13	GANGWAY SUPPORT DETAILS
24	S14	LOWERED DECK DETAILS
25	S15	CORNER GUIDE PILE COLLAR/FENDER DETAILS
26	M1	POTABLE WATER SYSTEM
27	E1	ELECTRICAL TITLE SHEET
28	E2	ELECTRICAL ONE-LINE DIAGRAM
29	E3	LIGHTING PLAN
30	E4	LIGHTING CONTROL
31	E5	CONDUIT ARRANGEMENT
32	E6	CARD READER ARRANGEMENTS
33	E7	CARD READER ELECTRICAL PLAN
34	E8	CARD READER WIRING DIAGRAM
35	E9	CARD READER BASE DETAILS

AS-BUILT

REVISIONS		
NO.	DATE	DESCRIPTION
1	10/10/2016	AS-BUILT

WATER EMERGENCY TRANSPORTATION AUTHORITY
WETA

kpff Consulting Engineers
1601 Fifth Avenue, Suite 1600
Seattle, Washington 98101
(206) 622-5822 Fax (206) 622-8130

CONSULTANT

SEAL/SIGNATURE

DESIGNED BY: DPE
DRAWN BY: MG
CHECKED BY: KN

PROJECT: WATER EMERGENCY TRANSPORTATION AUTHORITY PASSENGER FLOAT

TITLE: TITLE SHEET, MAPS & DRAWING INDEX

DATE: 12/01/2014
SHEET 1 OF 35
DRAWING NO. G1
JOB NO.

Plotted: Oct 11, 2016 – 9:25am taunies Layout: Layout1
V:\114129 (Dutra-WETA Pax Float)\05 CAD\Passenger Float\PF_AS-BUILTS\114129-G1.dwg

GENERAL NOTES

PROJECT REFERENCES:

1. SAN FRANCISCO BAY AREA WATER EMERGENCY TRANSPORTATION AUTHORITY (WETA) PASSENGER FLOAT RFP DOCUMENTS #14–005, INCLUDING ALL APPLICABLE ADDENDUMS – DATES VARY.
2. SAN FRANCISCO BAY AREA / WETA PASSENGER FLOAT PROJECT TECHNICAL SPECIFICATIONS, VOLUME III, DATED FEBRUARY 28, 2014
3. APPLICABLE PASSENGER FLOAT RFI RESPONSES PROVIDED BY WETA

VESSEL DATA

VESSEL	OVERALL LENGTH (FT)	BEAM (FT)	MAX DRAFT (FT)	RUB RAIL HT. (FT)	FREEBOARD (FT)
GEMINI (CLASS)	118.0	28.7	6.1	7.0/7.5	7.1/7.6
INTINTOLI (CLASS)	135.4	39.4	4.9	7.2/8.7	7.4/7.8
VALLEJO	110.4	28.5	3.2	4.6/7.5	6.0/6.3
PERALTA	114.8	32.8	6.9	3.6/4.6	–
BAY BREEZE	97.0	29.3	3.9	–	–

1. "–" INDICATES INFORMATION NOT PROVIDED.
2. MAXIMUM DESIGN DISPLACEMENT = 406 KIPS PER RFI 010 DATED 8/22/14.
3. "–/–" INDICATES LOW / HIGH ELEVATIONS.
4. RUB RAIL HEIGHT AND FREEBOARD ELEVATION RELATE TO THE HEIGHT ABOVE WATER LEVEL FOR FULLY LOADED (LOW) AND UNLOADED (HIGH CONDITIONS).

WATER LEVEL

VERTICAL DATUM: MEAN LOWER LOW WATER

SAN FRANCISCO: FIELD MEASUREMENTS AND NOAA
PROMENADE ELEVATION = 11.16 FT
MEAN HIGHER HIGH WATER (MHHW) = 5.84 FT
EXTREME HIGH WATER (EHW) = 7.27 FT
MEAN LOWER LOW WATER (MLLW) = 0.00 FT
EXTREME LOW WATER (ELW) = –2.01 FT

VALLEJO: PER RFI 022, VALLEJO DREDGING INFORMATION
PROMENADE ELEVATION = 9.17 FT
MEAN HIGHER HIGH WATER (MHHW) = 6.20 FT
EXTREME HIGH WATER (EHW) = 7.71 FT
MEAN LOWER LOW WATER (MLLW) = 0.00 FT
EXTREME LOW WATER (ELW) = –2.01 FT

DESIGN LIFE

STRUCUTURE: 50 YEARS
COATINGS: SEE SPECIFICATION SECTION 09810

SITE CONSIDERATIONS

PASSENGER FLOAT SITE USE LOCATIONS CONSIDERED DURING DESIGN ARE SAN FRANCISCO FERRY TERMINAL GATES B&E AND VALLEJO FERRY TERMINAL.

REFERENCE STANDARDS

ALL WORK SHALL COMPLY WITH OSHA STANDARD REQUIREMENTS.

ALL ELEVATED RAMPS, PLATFORMS, AND ADJUSTABLE RAMPS SHALL COMPLY WITH ADA STANDARD REQUIREMENTS UNLESS NOTED OTHERWISE ON THE DRAWINGS.

ABBREVIATIONS

ABV	ABOVE
ADD'L	ADDITIONAL
ASSY	ASSEMBLY
BHD	BULKHEAD
BOT	BOTTOM
BTWN	BETWEEN
CP	COMPLETE JOINT PENETRATION
CL	CENTERLINE
CLR	CLEAR
CONT	CONTINUOUS
CTR	CENTER
DBL	DOUBLE
DIA, ø	DIAMETER
DIAG	DIAGONAL
EA	EACH
EF	EACH FACE
EL	ELEVATION
EQ	EQUAL
ES	EACH SIDE
EX/EXIST	EXISTING
EXT	EXTERIOR
FB	FREEBOARD/FLAT BAR
FT	FEET
FWD	FORWARD
GALV	GALVANIZED
HORIZ	HORIZONTAL
HSS	HOLLOW STRUCTURAL SECTIONS
HT	HEIGHT
IH	INSIDE HANDRAILS
K	KIP (1,000 LBS.)
LB	POUND
LLH	LONG LEG HORIZONTAL
LLV	LONG LEG VERTICAL
LONG	LONGITUDINAL
MAX	MAXIMUM
MFR	MANUFACTURER
MIN	MINIMUM
MISC	MISCELLANEOUS
NOM	NOMINAL
NO	NUMBER
NTS	NOT TO SCALE
OC	ON CENTER
OG	OUTSIDE GUARDRAILS
OPNG	OPENING
OPP	OPPOSITE
PL	PLATE
PSF	POUNDS PER SQUARE FOOT
PT	POINT
R	RADIUS
REF	REFERENCE
REQ'D	REQUIRED
ROM	RANGE OF MOTION
RTN	RETURN
SIM	SIMILAR
SQ	SQUARE
SS	STAINLESS STEEL
STD	STANDARD
STIFF	STIFFENER
STL	STEEL
SYMM	SYMMETRICAL
T/	TOP OF
T&B	TOP AND BOTTOM
TYP	TYPICAL
UNO	UNLESS NOTED OTHERWISE
VERT	VERTICAL
W/	WITH
WF	WIDE FLANGE
WP	WORK POINT
WT	WATERTIGHT

LEGEND

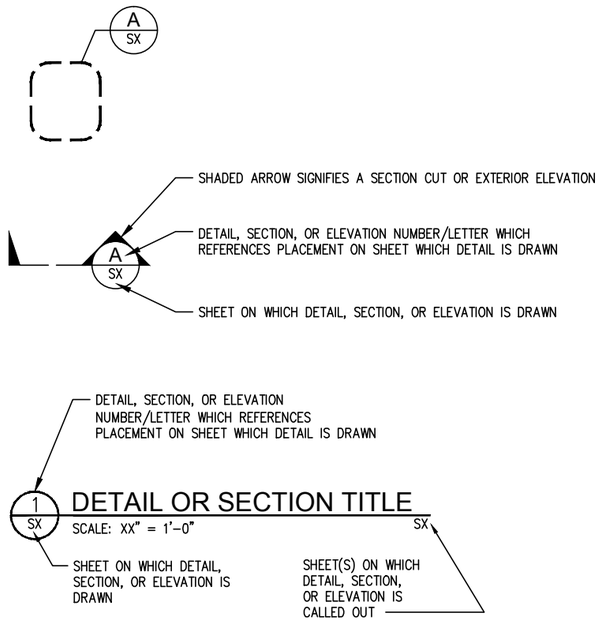

AS-BUILT

REVISIONS		
NO.	DATE	DESCRIPTION
1	10/10/2016	AS-BUILT

WATER EMERGENCY TRANSPORTATION AUTHORITY
WETA

kpff Consulting Engineers
1601 Fifth Avenue, Suite 1600
Seattle, Washington 98101
(206) 622-5822 Fax (206) 622-8130

CONSULTANT

SEAL/SIGNATURE

DESIGNED BY: DPE
DRAWN BY: MG
CHECKED BY: KN

PROJECT: WATER EMERGENCY TRANSPORTATION AUTHORITY PASSENGER FLOAT

TITLE: GENERAL NOTES, ABBREVIATIONS & LEGEND

DATE: 12/01/2014
SHEET 2 OF 35
DRAWING NO. G2
JOB NO.

Plotted: Oct 13, 2016 – 12:31pm taunieo Layout: Layout1
V:\114129 (Dutra-WETA Pax Float)\05 CAD\Passenger Float\PF_AS-BUILTS\114129-G2.dwg

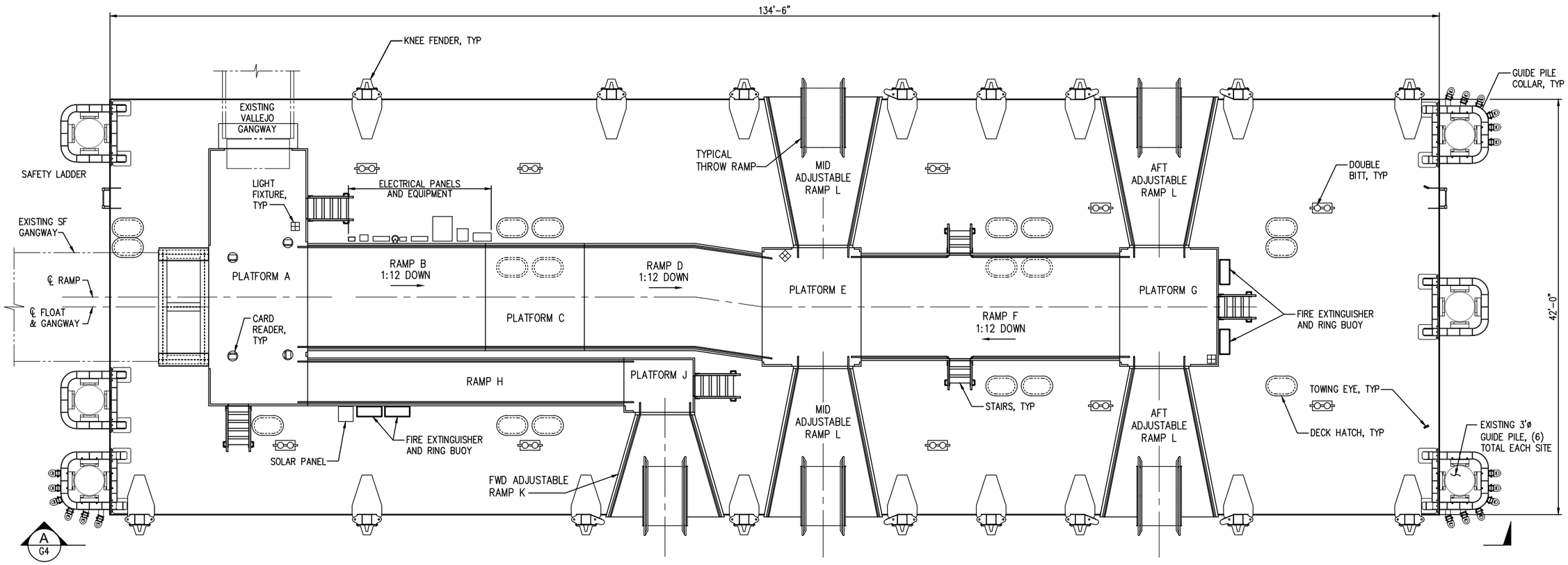

1 / G3 GENERAL DECK LAYOUT PLAN

SCALE: 3/16" = 1'-0"

NOTES:

1. FOR MISCELLANEOUS STEEL FRAMING PLAN SEE SHEET S5.
2. FOR RAMP AND PLATFORM SUPERSTRUCTURE FRAMING PLAN SEE SHEET S6.
3. ELEVATIONS SHOWN ARE FROM TOP OF FLOAT DECK AT SIDES (3'-0" FB).
4. FIRE EXTINGUISHER AND RING BUOY REQUIREMENTS TO BE INSTALLED BY OTHERS.
5. MAXIMUM LOAD ON A SINGLE TOWING EYE SHALL BE 5 TONS. DIRECTION OF APPLIED LOAD SHALL ALIGN WITH TOWING EYE. HOWEVER, SHORT TERM EXCURSIONS FROM THIS DIRECTION (I.E. WHEN TURNING) OF UP TO 20-DEGREES ARE ACCEPTABLE.

AS-BUILT

REVISIONS		
NO.	DATE	DESCRIPTION
1	10/10/2016	AS-BUILT

WATER EMERGENCY TRANSPORTATION AUTHORITY
WETA

kpff Consulting Engineers
1601 Fifth Avenue, Suite 1600
Seattle, Washington 98101
(206) 622-5822 Fax (206) 622-8130

CONSULTANT

SEAL/SIGNATURE

DESIGNED BY: DPE
DRAWN BY: MG
CHECKED BY: KN

PROJECT: WATER EMERGENCY TRANSPORTATION AUTHORITY PASSENGER FLOAT

TITLE: GENERAL ARRANGEMENT - DECK PLAN

DATE: 12/01/2014
SHEET 3 OF 35
DRAWING NO. G3
JOB NO.

Plotted: Oct 11, 2016 – 10:36am taunieo Layout: Layout1
V:\114129 (Dutra-WETA Pax Float)\05 CAD\Passenger Float\PF_AS-BUILTS\114129-G3.dwg

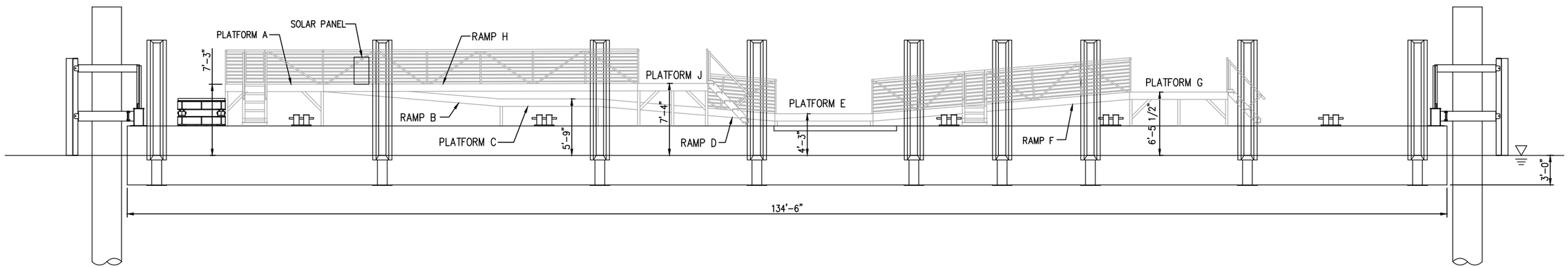

A G4 GENERAL ARRANGEMENT ELEVATION
SCALE: NOT TO SCALE 1/G3

NOTES:

1. SAN FRANCISCO GANGWAY NOT SHOWN FOR CLARITY.
2. ADJUSTABLE RAMPS NOT SHOWN FOR CLARITY.

AS-BUILT

REVISIONS		
NO.	DATE	DESCRIPTION
1	10/10/2016	AS-BUILT

WATER EMERGENCY TRANSPORTATION AUTHORITY
WETA

kpff Consulting Engineers
1601 Fifth Avenue, Suite 1600
Seattle, Washington 98101
(206) 622-5822 Fax (206) 622-8130

CONSULTANT

SEAL/SIGNATURE

DESIGNED BY: DPE
DRAWN BY: MG
CHECKED BY: KN

PROJECT: WATER EMERGENCY TRANSPORTATION AUTHORITY PASSENGER FLOAT

TITLE: GENERAL ARRANGEMENT - ELEVATION

DATE: 12/01/2014
SHEET 4 OF 35
DRAWING NO. G4
JOB NO.

Plotted: Oct 11, 2016 – 1:40pm taunieo Layout: Layout1
V:\114129 (Dutra-WETA Pax Float)\05 CAD\Passenger Float\PF_AS-BUILTS\114129-G4.dwg

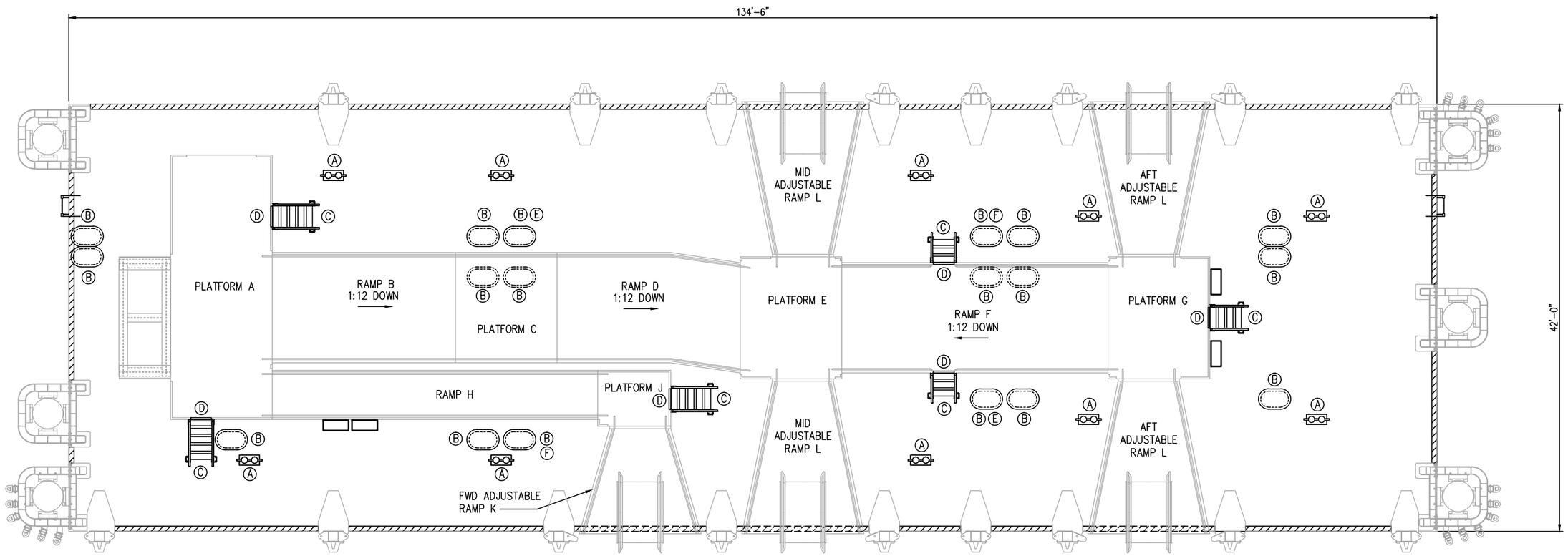

1 / G5 STRIPING AND SIGNAGE PLAN
SCALE: 3/16" = 1'-0"

LEGEND:

- PAINTED 6 INCH WIDE STRIPE
- (A) ITEM SHALL BE PAINTED SAFETY YELLOW
- (B) HATCH SHALL BE PAINTED SAFETY YELLOW AND IDENTIFIED "CONFINED SPACE" WITH BLACK LETTERS.
- (C) STAIR TREADS SHALL BE PAINTED WITH (2) ALTERNATING STRIPES OF CONTRASTING COLORS.
- (D) SIGN SHALL BE PROVIDED AT GATE THAT READS " RESTRICTED – CREW ACCESS ONLY".
- (E) HATCH SHALL INDICATE LEVEL OF PERMANENT BALLAST AS "PRESSED FULL".
- (F) HATCH SHALL INDICATE LEVEL OF PERMANENT BALLAST AS "65% FULL".

AS-BUILT

REVISIONS		
NO.	DATE	DESCRIPTION
1	10/10/2016	AS-BUILT

WATER EMERGENCY TRANSPORTATION AUTHORITY
WETA

kpff Consulting Engineers
1601 Fifth Avenue, Suite 1600
Seattle, Washington 98101
(206) 622-5822 Fax (206) 622-8130

CONSULTANT

SEAL/SIGNATURE

DESIGNED BY: DPE
DRAWN BY: MG
CHECKED BY: KN

PROJECT: WATER EMERGENCY TRANSPORTATION AUTHORITY PASSENGER FLOAT

TITLE: STRIPING AND SIGNAGE PLAN

DATE: 12/01/2014
SHEET 5 OF 35
DRAWING NO. G5
JOB NO.

Plotted: Oct 11, 2016 – 1:49pm taurieq Layout: Layout1
V:\114129 (Dutra-WETA Pax Float)\05 CAD\Passenger Float\PF_AS-BUILTS\114129-G5.dwg

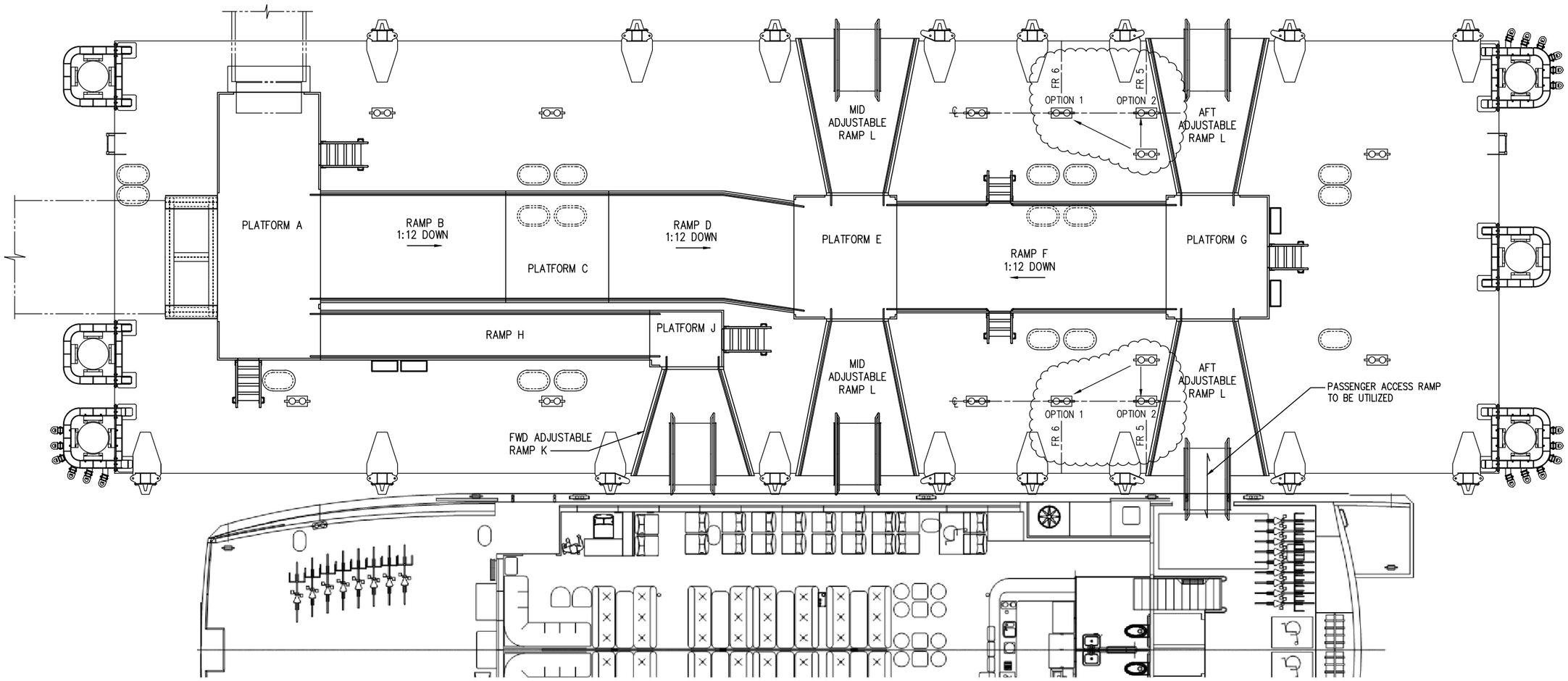

NOTES:

1. GEMINI MOORING ARRANGEMENT MAY ALSO BE MIRRORED ABOUT THE OPPOSITE SIDE OF THE FLOAT AT THE SAN FRANCISCO TERMINALS.
2. GEMINI MOORING ARRANGEMENT IS RESTRICTED TO LOCATION SHOWN AT THE VALLEJO TERMINAL.
3. THE FORWARD RAMP MAY ALSO BE UTILIZED FOR PASSENGER LOADING/UNLOADING.

AS-BUILT

REVISIONS		
NO.	DATE	DESCRIPTION
1	10/10/2016	AS-BUILT

WATER EMERGENCY TRANSPORTATION AUTHORITY
WETA

kpff Consulting Engineers
1601 Fifth Avenue, Suite 1600
Seattle, Washington 98101
(206) 622-5822 Fax (206) 622-8130

CONSULTANT

SEAL/SIGNATURE

DESIGNED BY: DPE
DRAWN BY: MG
CHECKED BY: KN

PROJECT: WATER EMERGENCY TRANSPORTATION AUTHORITY PASSENGER FLOAT

TITLE: MOORING ARRANGEMENT - GEMINI

DATE: 12/01/2014
SHEET 6 OF 35
DRAWING NO. G6
JOB NO.

Plotted: Oct 11, 2016 – 1:56pm taunieo Layout: Layout1
V:\114129 (Dutra-WETA Pax Float)\05 CAD\Passenger Float\PF_AS-BUILTS\114129-G6.dwg

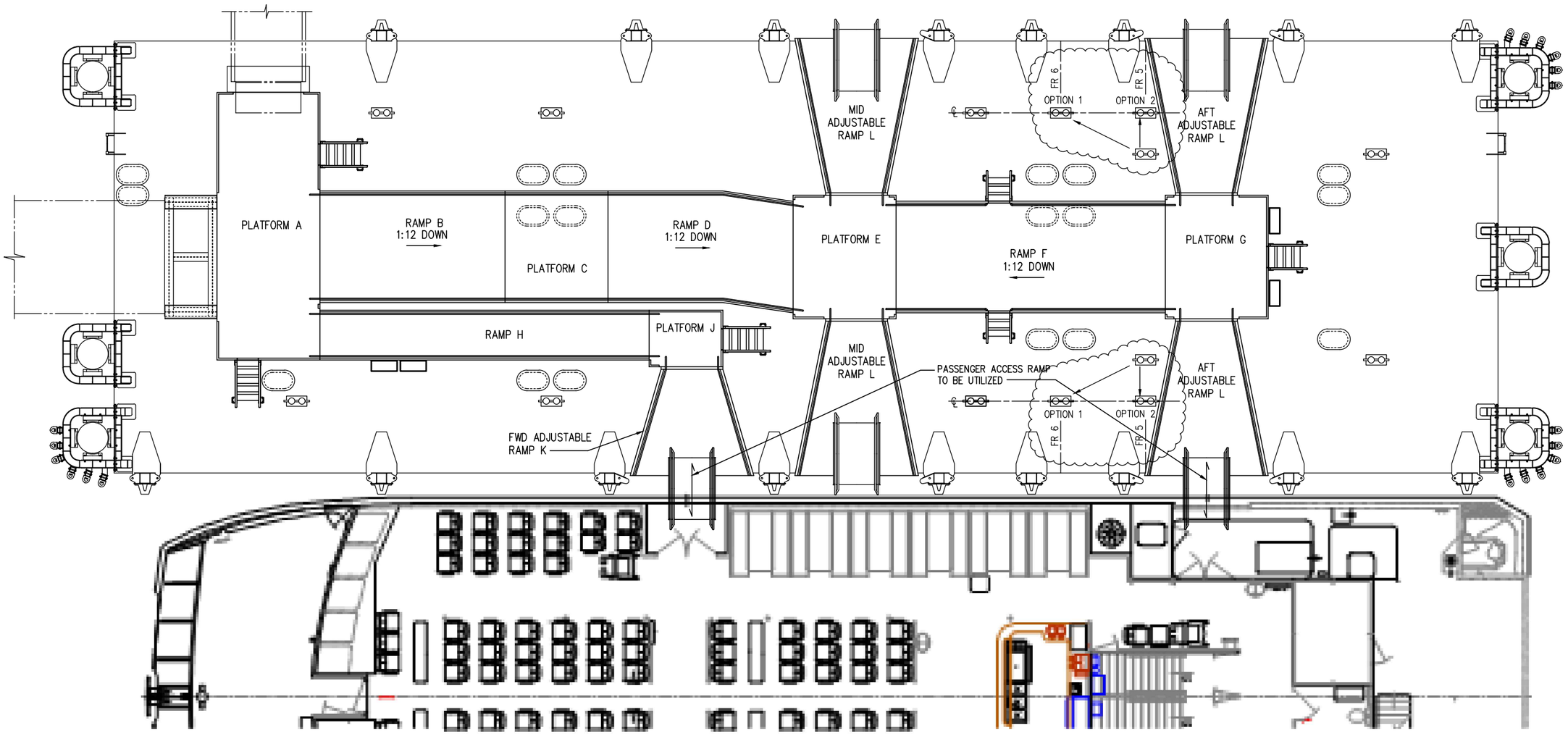

NOTES:

1. INTINTOLI MOORING ARRANGEMENT MAY ALSO BE MIRRORED ABOUT THE OPPOSITE SIDE OF THE FLOAT AT THE SAN FRANCISCO TERMINALS.

2. INTINTOLI MOORING ARRANGEMENT IS RESTRICTED TO LOCATION SHOWN AT THE VALLEJO TERMINAL.

AS-BUILT

REVISIONS		
NO.	DATE	DESCRIPTION
1	10/10/2016	AS-BUILT

WATER EMERGENCY TRANSPORTATION AUTHORITY
WETA

kpff Consulting Engineers
1601 Fifth Avenue, Suite 1600
Seattle, Washington 98101
(206) 622-5822 Fax (206) 622-8130

CONSULTANT

SEAL/SIGNATURE

DESIGNED BY: DPE
DRAWN BY: MG
CHECKED BY: KN

PROJECT: WATER EMERGENCY TRANSPORTATION AUTHORITY PASSENGER FLOAT

TITLE: MOORING ARRANGEMENT - INTINTOLI

DATE: 12/01/2014
SHEET 7 OF 35
DRAWING NO. G7
JOB NO.

Plotted: Oct 11, 2016 – 2:04pm taunieo Layout: Layout1
V:\114129 (Dutra-WETA Pax Float)\05 CAD\Passenger Float\PF_AS-BUILTS\114129-G7.dwg

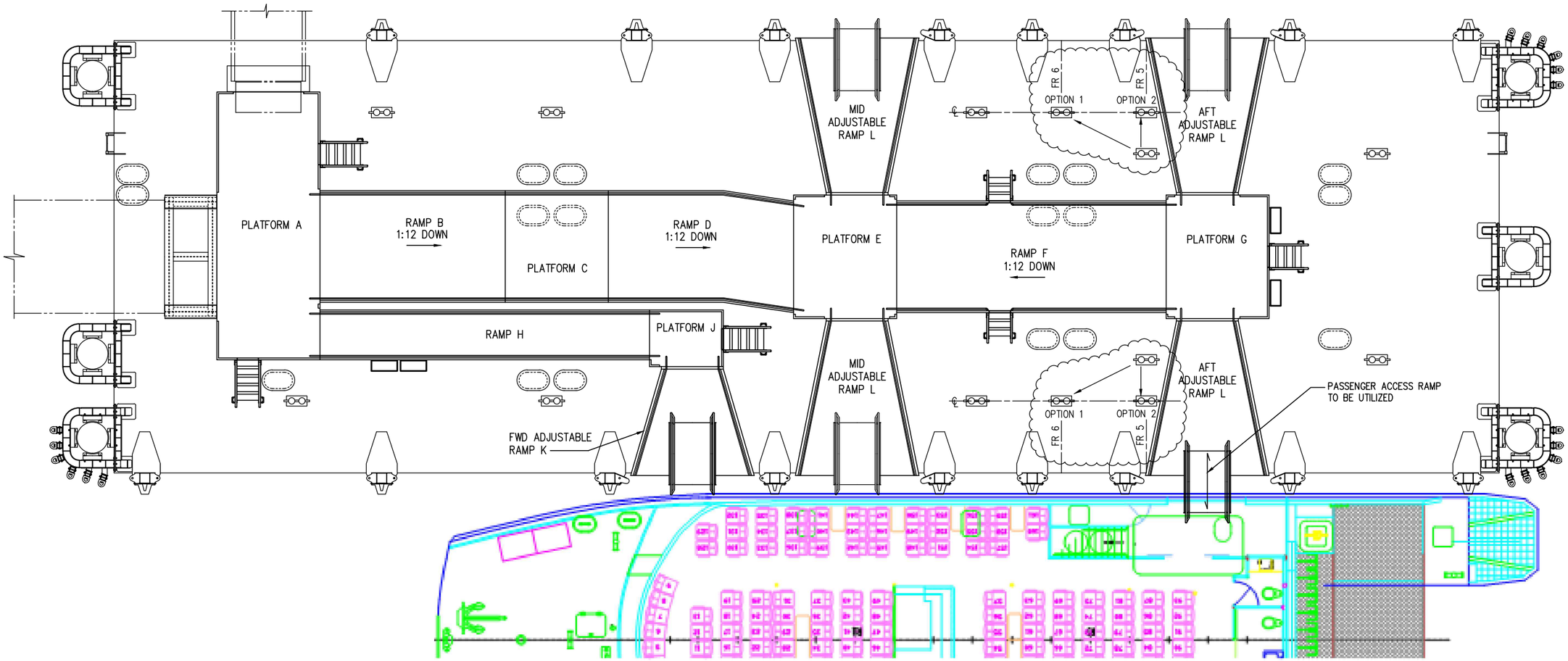

NOTES:

1. VALLEJO MOORING ARRANGEMENT MAY ALSO BE MIRRORED ABOUT THE OPPOSITE SIDE OF THE FLOAT AT THE SAN FRANCISCO TERMINALS.

2. VALLEJO MOORING ARRANGEMENT IS RESTRICTED TO LOCATION SHOWN AT THE VALLEJO TERMINAL.

AS-BUILT

REVISIONS		
NO.	DATE	DESCRIPTION
1	10/10/2016	AS-BUILT

WATER EMERGENCY TRANSPORTATION AUTHORITY
WETA

kpff Consulting Engineers
1601 Fifth Avenue, Suite 1600
Seattle, Washington 98101
(206) 622-5822 Fax (206) 622-8130

CONSULTANT

SEAL/SIGNATURE

DESIGNED BY: DPE
DRAWN BY: MG
CHECKED BY: KN

PROJECT: WATER EMERGENCY TRANSPORTATION AUTHORITY PASSENGER FLOAT

TITLE: MOORING ARRANGEMENT - VALLEJO

DATE: 12/01/2014
SHEET 8 OF 35
DRAWING NO. G8
JOB NO.

Plotted: Oct 11, 2016 – 2:56pm taunies Layout: Layout1
V:\114129 (Dutra-WETA Pax Float)\05 CAD\Passenger Float\PF_AS-BUILTS\114129-G8.dwg

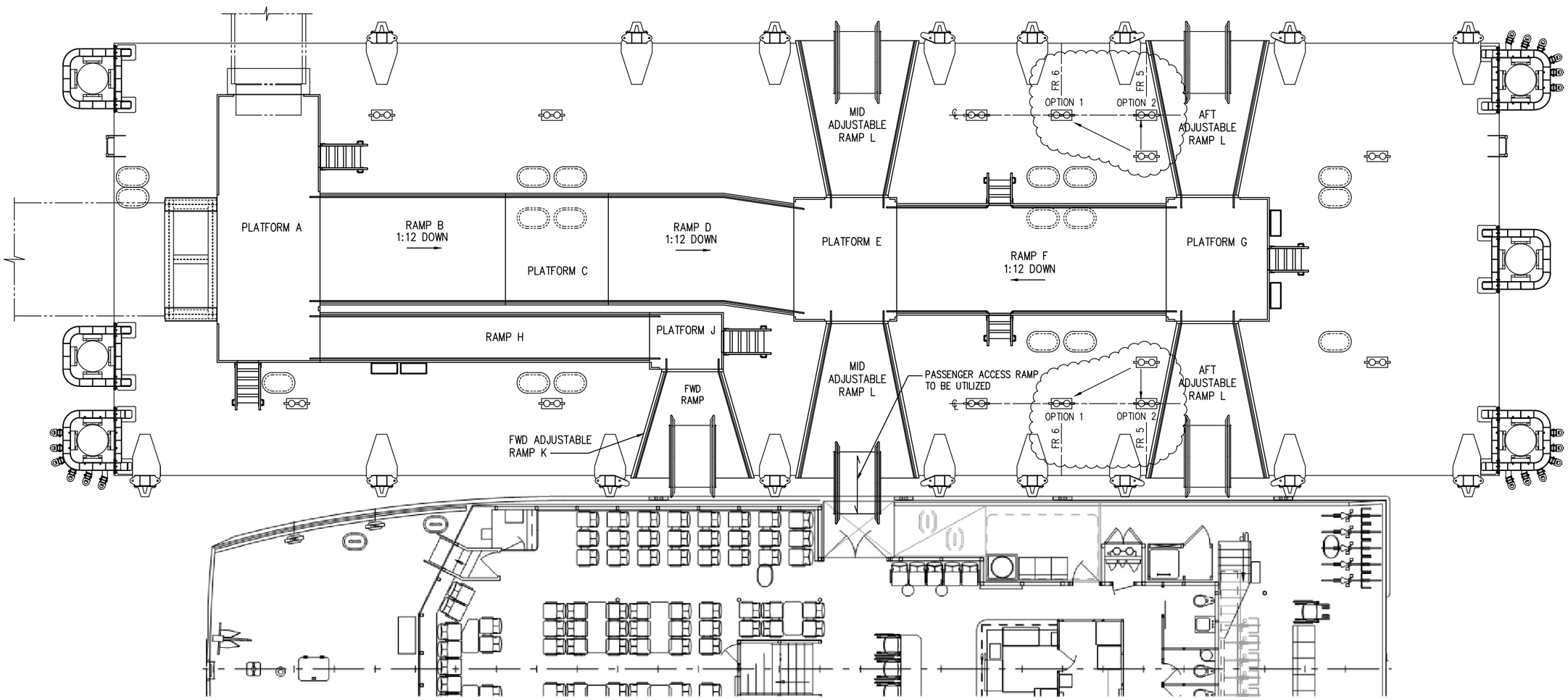

NOTES:

1. PERALTA MOORING ARRANGEMENT MAY ALSO BE MIRRORED ABOUT THE OPPOSITE SIDE OF THE FLOAT AT THE SAN FRANCISCO TERMINALS.

2. PERALTA MOORING ARRANGEMENT IS RESTRICTED TO LOCATION SHOWN AT THE VALLEJO TERMINAL.

AS-BUILT

REVISIONS		
NO.	DATE	DESCRIPTION
1	10/10/2016	AS-BUILT

WATER EMERGENCY TRANSPORTATION AUTHORITY
WETA

kpff Consulting Engineers
1601 Fifth Avenue, Suite 1600
Seattle, Washington 98101
(206) 622-5822 Fax (206) 622-8130

CONSULTANT

SEAL/SIGNATURE

DESIGNED BY: DPE
DRAWN BY: MG
CHECKED BY: KN

PROJECT: WATER EMERGENCY TRANSPORTATION AUTHORITY PASSENGER FLOAT

TITLE: MOORING ARRANGEMENT - PERALTA

DATE: 12/01/2014
SHEET 9 OF 35
DRAWING NO. G9
JOB NO.

Plotted: Oct 11, 2016 – 3:07pm taunieo Layout: Layout1
V:\114129 (Dutra-WETA Pax Float)\05 CAD\Passenger Float\PF_AS-BUILTS\114129-G9.dwg

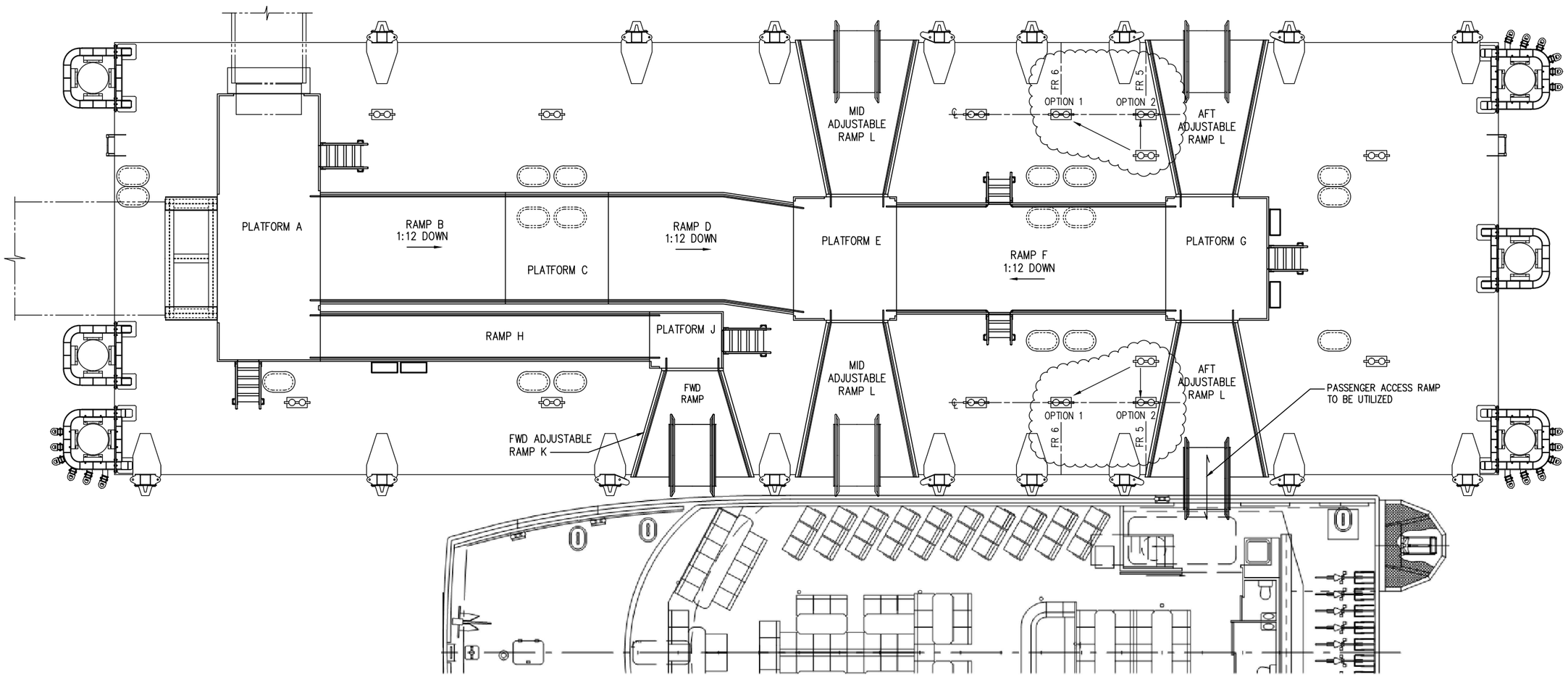

NOTES:

1. BAY BREEZE MOORING ARRANGEMENT MAY ALSO BE MIRRORED ABOUT THE OPPOSITE SIDE OF THE FLOAT AT THE SAN FRANCISCO TERMINALS.
2. BAY BREEZE MOORING ARRANGEMENT IS RESTRICTED TO LOCATION SHOWN AT THE VALLEJO TERMINAL.

AS-BUILT

REVISIONS		
NO.	DATE	DESCRIPTION
1	10/10/2016	AS-BUILT

WATER EMERGENCY TRANSPORTATION AUTHORITY
WETA

kpff Consulting Engineers
1601 Fifth Avenue, Suite 1600
Seattle, Washington 98101
(206) 622-5822 Fax (206) 622-8130

CONSULTANT

SEAL/SIGNATURE

DESIGNED BY: DPE
DRAWN BY: MG
CHECKED BY: KN

PROJECT: WATER EMERGENCY TRANSPORTATION AUTHORITY PASSENGER FLOAT

TITLE: MOORING ARRANGEMENT - BAY BREEZE

DATE: 12/01/2014
SHEET 10 OF 35
DRAWING NO. G10
JOB NO.

Plotted: Oct 11, 2016 – 3:10pm taunies Layout: Layout1
V:\114129 (Dutra-WETA Pax Float)\05 CAD\Passenger Float\PF_AS-BUILTS\114129-G10.dwg

STRUCTURAL NOTES

REFERENCES AND STANDARDS

1. AMERICAN BUREAU OF SHIPPING (ABS), RULES FOR BUILDING AND CLASSING STEEL BARGES 2014
2. ABS WELDING CONSUMABLES, 2014
3. AMERICAN INSTITUTE OF STEEL CONSTRUCTION (AISC), STEEL CONSTRUCTION MANUAL, 14TH EDITION
4. AMERICAN WELDING SOCIETY (AWS) D1.1, STRUCTURAL WELDING CODE 2010
5. CALIFORNIA BUILDING CODE (CBC), CALIFORNIA CODE OF REGULATIONS, TITLE 24, 2013
6. AMERICAN SOCIETY OF CIVIL ENGINEERS ASCE 7-10, MINIMUM DESIGN LOADS FOR BUILDING AND OTHER STRUCTURES

MATERIALS

STEEL:

HULL PLATES AND BARS (UNO)	-ABS GRADE A OR ASTM A36 OR ASTM A131
STEEL PIPE	-ASTM A53 GRADE B
W OR HP SECTIONS	-ASTM A992
ALL OTHER PLATES	-ASTM A992
RECTANGULAR HSS	-ASTM A500, GRADE B
ANGLES & CHANNELS	-ASTM A36
NUTS/HATCH	-ASTM A563, GRADE A/A194
WASHERS/HARDENED	-ASTM F844/F436
BOLTS	-ASTM A325, TYPE X
WELDING ELECTRODES	-E70XX, 70 KSI, LOW HYDROGEN

FENDERS:

V-FENDERS	LONGWOOD TRAPEZOID 13W FENDER
WING-TYPE-FENDERS	FENDERTEAM WD245 OR APPROVED EQUAL

UHMW:

ULTRA HIGH MOLECULAR WEIGHT POLYETHYLENE (UHMW) SHALL BE UV STABILIZED VIRGIN MATERIAL. VIRGIN RESIN SHALL BE HOMOPOLYMER OF ETHYLENE WITH INTRINSIC VISCOSITY (IV) BETWEEN 22.0 AND 28.0 DL/G PER ASTM D792. FINISHED FORM SHALL MAINTAIN ULTRAVIOLET STABILITY FOR MINIMUM 25 YEARS AND SHALL BE FREE OF FRESHWATER OR PETROLEUM PRODUCT LEACHABLE MATERIAL. COLOR SHALL BE WHITE. FINISHED FORM SHALL HAVE THE FOLLOWING PROPERTIES:

SPECIFIC GRAVITY (ASTM D792)	0.935-0.955 GM/CM^3
ULTIMATE TENSILE STRENGTH, MIN (ASTM D638)	6,300 PSI
ULTIMATE ELONGATION, MIN (ASTM D638)	250 PERCENT
IMPACT STRENGTH (ASTM 256) TEST METHOD A, IZOD NON-BREAK FOR ALL FIVE DETERMINATIONS IN SAMPLE.	
HARDNESS, MIN (ASTM D785)	SHORE D 63
COEFFICIENT OF FRICTION (ASTM D1894)	KINETIC, MAXIMUM 0.11 STATIC, MAXIMUM 0.20
WATER ABSORPTION (ASTM D570)	NIL
THERMAL EXPANSION, MAX	9.1×10^{-5} IN/IN/°F

DESIGN CRITERIA

DEAD LOAD

WEIGHT OF FIXED STRUCTURE AND COMPONENTS

WEIGHT OF PERMANENT BALLAST

WEIGHT OF GANGWAY STRUCTURES

HYDROSTATIC PRESSURE & BUOYANCY (WATER LEVEL PLUS 1 FOOT)

LIVE LOAD

ELEVATED RAMPS, PLATFORMS, AND GANGWAYS	100 PSF - UNIFORM 650 LB - CONCENTRATED
FLOAT DECK	40 PSF - UNIFORM 650 LB - CONCENTRATED
FENDERS (VESSEL IMPACT)	1.5 FT/S - SPEED 10 DEGREES - ANGLE MASS OF WATER ADDED
MOORING BITTS	50 KIPS - HORIZONTAL 25 KIPS - VERTICAL
PILE COLLARS	100 KIPS - HORIZONTAL
TOWING BRACKETS	BASED ON TOW CABLE
GUARDRAILS / HANDRAILS	50 PSF - HORIZONTAL UNIFORM 200 LB - CONCENTRATED
LADDERS / STAIRS	ANSI 14.3

THE MAXIMUM ALLOWABLE BREAKING STRENGTH FOR ANY TOW CABLE SHALL BE 55 KIPS. THIS RESULTANT FORCE IS TO BE DETERMINED FROM THE VERTICAL AND HORIZONTAL COMPONENT FORCES USING THE SRSS METHOD.

WELDING

ALL WELDING SHALL CONFORM TO AISC AND AWS STANDARDS, OR SHALL CONFORM TO ABS STANDARDS, AND SHALL BE PERFORMED BY AWS CERTIFIED, OR ABS CERTIFIED WELDERS. ONLY PREQUALIFIED WELDS SHALL BE USED. SHOP DRAWINGS SHALL SHOW ALL WELDING WITH AWS A2.4 SYMBOLS. MINIMUM FILLET WELDING SHALL BE 1/4", IF NOT INDICATED.

WHERE WELDS ARE NOT SHOWN, THE CONNECTION SHALL BE MADE WITH A COMPLETE JOINT PENETRATION WELD OR SHALL DEVELOP THE FULL CAPACITY OF MEMBERS BEING CONNECTED.

ALL WELDING EXPOSED TO WEATHER SHALL BE CONTINUOUS. ALL WELDING WITHIN DESIGNATED BALLAST TANKS SHALL BE CONTINUOUS.

ALL BUTT WELDS SHOWN WITH THICKNESS DIFFERENCES EXCEEDING 1/8" SHALL BE TAPERED 3:1 FROM THICKER PLATE.

FOR MEMBERS INTERRUPTED AT PERPENDICULAR FRAMING, THE MAXIMUM ALLOWABLE OUT-OF-ALIGNMENT BETWEEN EACH SIDE OF THE INTURRUPTED MEMBER SHALL BE 1/2 THE MEMBER THICKNESS.

GALVANIZING & COATING

SEE COATING SPECIFICATION SECTION 09810

ZINC ANODES: TYPE ZHS-23 CONFORMING TO MILITARY SPECIFICATION MIL-A-18001 PROVIDED FOR EVERY 100 SF OF WET SURFACE.

ENVIRONMENTAL LOADS

SAN FRANCISCO FERRY TERMINAL GATES B & E

LOADING	DIRECTION	
	BROADSIDE	END-ON
WIND (3-SEC GUST)*	64.1 KNOTS	64.1 KNOTS
WIND (1-HOUR)*	42.5 KNOTS	42.5 KNOTS
CURRENT	-NIL-	-NIL-
WAVE HT (HS)	4.2 FT	4.45 FT
WAVE PEAK PERIOD	5.0 SEC	4.17 SEC
BOAT WAKE	3.0 FT	3.0 FT

VALLEJO

LOADING	DIRECTION
	BROADSIDE & END-ON
WIND (3-SEC GUST)*	85 MPH
WIND (1-HOUR)*	-
CURRENT	3.5 KNOTS
WAVE HT (HS)	1.0 FT
WAVE PEAK PERIOD	2.5 SEC
BOAT WAKE	-

* 3-SEC GUST WIND LOAD NOT COMBINED WITH WAVE LOAD. USE 1-HOUR WIND IN COMBINATION WITH WAVE LOAD

"-" INDICATES VALUE NOT PROVIDED

DAMAGE STABILITY

COMPARTMENT FLOODING - FLOAT SHALL REMAIN AFLOAT, STABLE, AND UPRIGHT WITH ONE COMPARTMENT FLOODING WITH MINIMUM 3 INCH FREEBOARD AT ANY POINT. ASSUMES BALLAST TANKS ARE PRESSED UP.

WIND LOADING

RISK CATEGORY: IV
EXPOSURE CATEGORY: B
SURFACE ROUGHNESS: B
WIND SPEED: 85 MPH
Kzt = 1.0 Kd = 0.85
GCf = 1.1 Kz = 0.57

OTHER REQUIREMENTS

BALLAST COMPARTMENTS: DIFFERENTIAL FLOODING SHALL CHANGE LIST, TRIM, AND DRAFT BY 4 INCHES MIN

FENDERS: 11.5 INCH MIN DEPTH
CONTIUOUS LENGTH ABLE TO BE INVERTED AFTER WEARING
77.25 TONS / FT @ 50% COMPRESSION

PILE GUIDES: MUST ACCOMMODATE EXISTING PILE LAYOUT AT SAN FRANCISCO GATES B & E.

AS-BUILT

REVISIONS		
NO.	DATE	DESCRIPTION
1	10/10/2016	AS-BUILT

WATER EMERGENCY TRANSPORTATION AUTHORITY
WETA

kpff Consulting Engineers
1601 Fifth Avenue, Suite 1600
Seattle, Washington 98101
(206) 622-5822 Fax (206) 622-8130

CONSULTANT

SEAL/SIGNATURE

DESIGNED BY: DPE
DRAWN BY: MG
CHECKED BY: KN

PROJECT: WATER EMERGENCY TRANSPORTATION AUTHORITY PASSENGER FLOAT

TITLE: STRUCTURAL NOTES

DATE: 12/01/2014
SHEET 11 OF 35
DRAWING NO. S1
JOB NO.

Plotted: Oct 11, 2016 - 3:30pm taurieq Layout: Layout1
V:\114129 (Dutra-WETA Pax Float)\05 CAD\Passenger Float\PF_AS-BUILTS\114129-S01.dwg

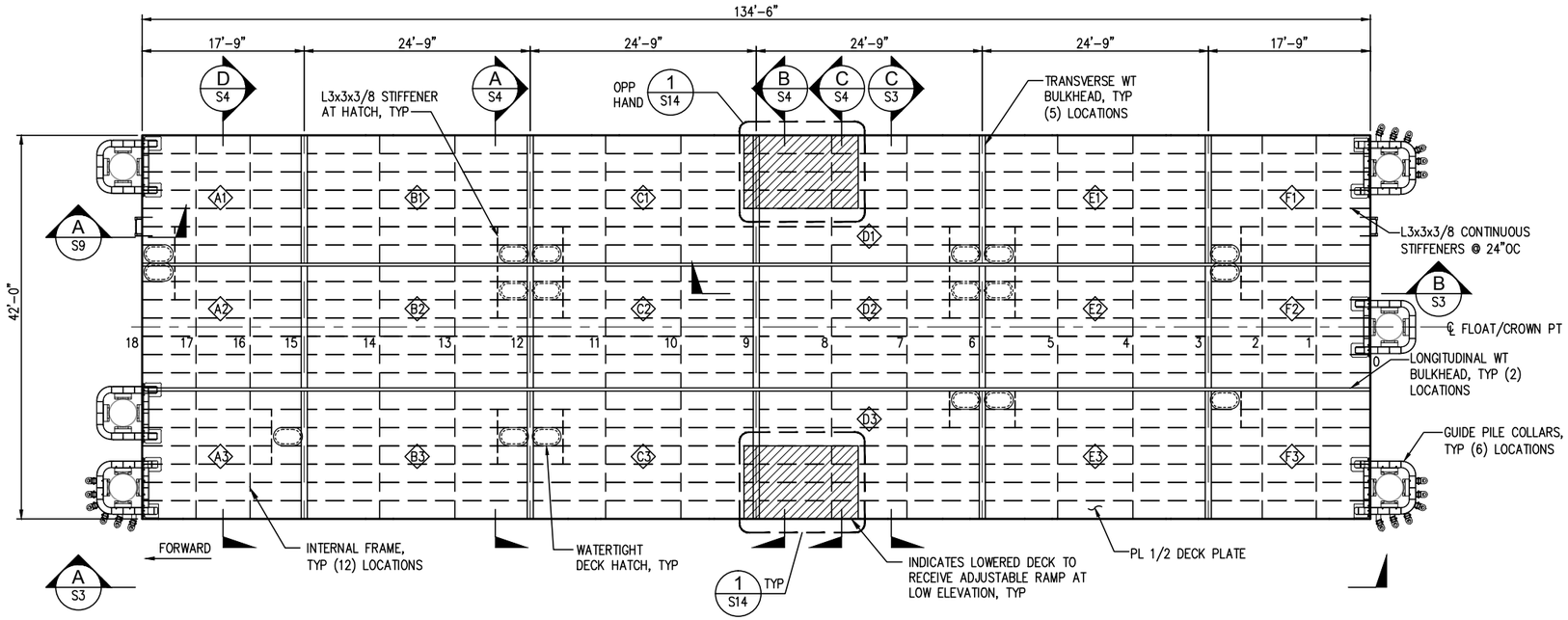

1/S2 DECK PLAN
SCALE: 1/8" = 1'-0"

NOTES:

1. FLOAT FREEBOARD DESIGNED TO BE 3'-0" ± 1" WITH FULL LIVE LOAD AND ALL SUPERIMPOSED DEAD LOADS.
2. ALL TRANSVERSE BULKHEADS SHALL BE WATERTIGHT.
3. THE FOLLOWING COMPARTMENTS ARE BALLAST COMPARTMENTS AND SHALL BE WATER TIGHT (UTILIZE CONTINUOUS WELDS THROUGHOUT):

   A1 C1 D1 F1
   A3 C3 D3 F3

4. FENDERS ARE NOT SHOWN FOR CLARITY.

LEGEND:

COMPARTMENT NUMBER

ANODE

ANODE (BELOW)

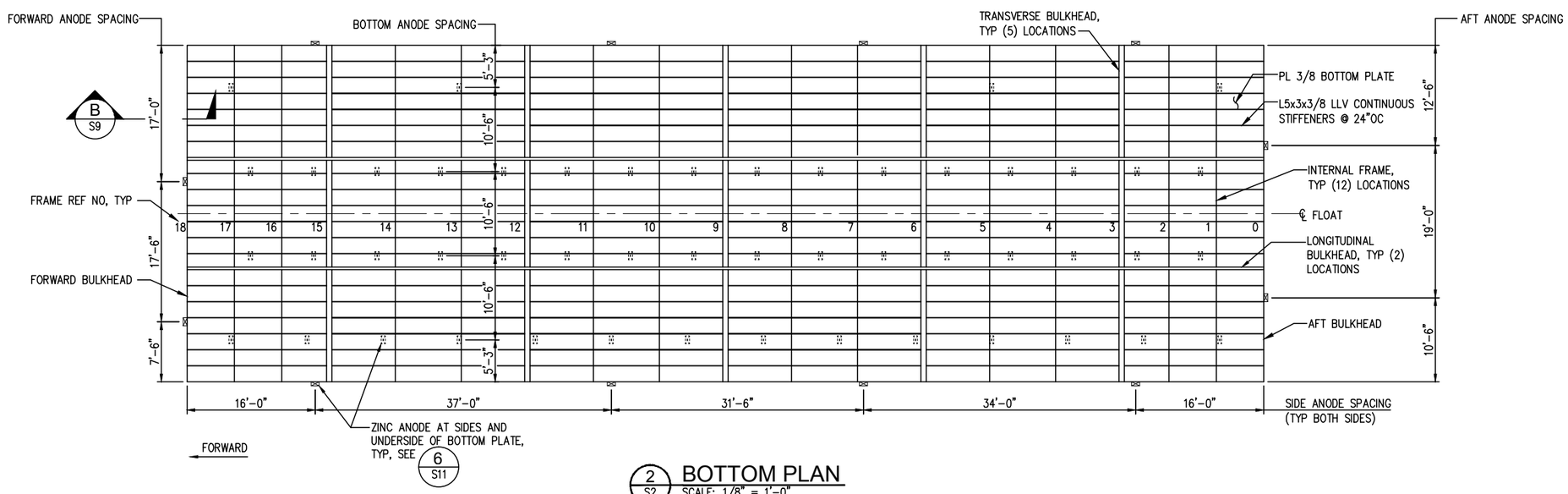

2/S2 BOTTOM PLAN
SCALE: 1/8" = 1'-0"

AS-BUILT

REVISIONS		
NO.	DATE	DESCRIPTION
1	10/10/2016	AS-BUILT

WATER EMERGENCY TRANSPORTATION AUTHORITY
WETA

kpff Consulting Engineers
1601 Fifth Avenue, Suite 1600
Seattle, Washington 98101
(206) 622-5822 Fax (206) 622-8130

CONSULTANT

SEAL/SIGNATURE

DESIGNED BY: DPE
DRAWN BY: MG
CHECKED BY: KN

PROJECT: WATER EMERGENCY TRANSPORTATION AUTHORITY PASSENGER FLOAT

TITLE: STRUCTURAL PLANS

DATE: 12/01/2014
SHEET 12 OF 35
DRAWING NO. S2
JOB NO.

Plotted: Oct 11, 2016 – 3:39pm taurisa Layout: Layout1
V:\114129 (Dutra-WETA Pax Float)\05 CAD\Passenger Float\PF_AS-BUILTS\114129-S02.dwg

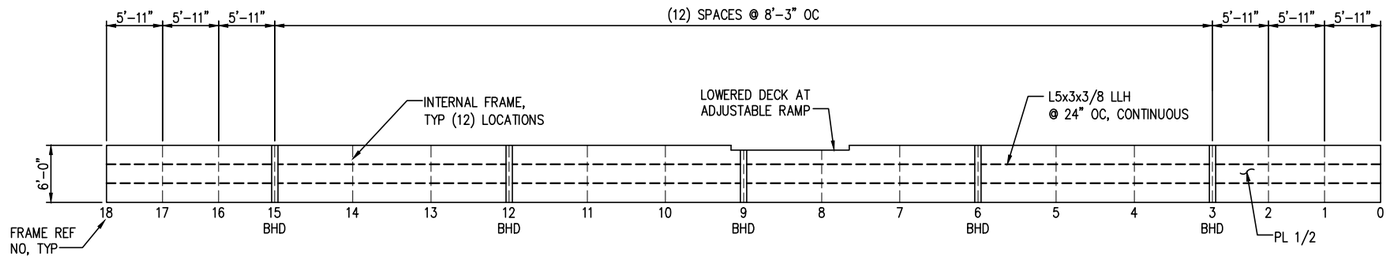

A/S3 SIDE SHELL ELEVATION

SCALE: 1/8" = 1'-0" 1/S2

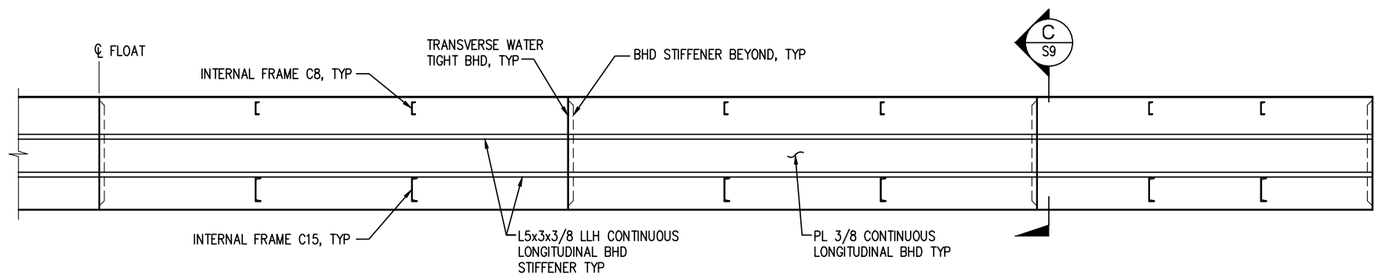

NOTE: FORWARD HALF OF FLOAT SIMILAR

B/S3 AFT LONGITUDINAL SECTION

SCALE: 1/4" = 1'-0" 1/S2

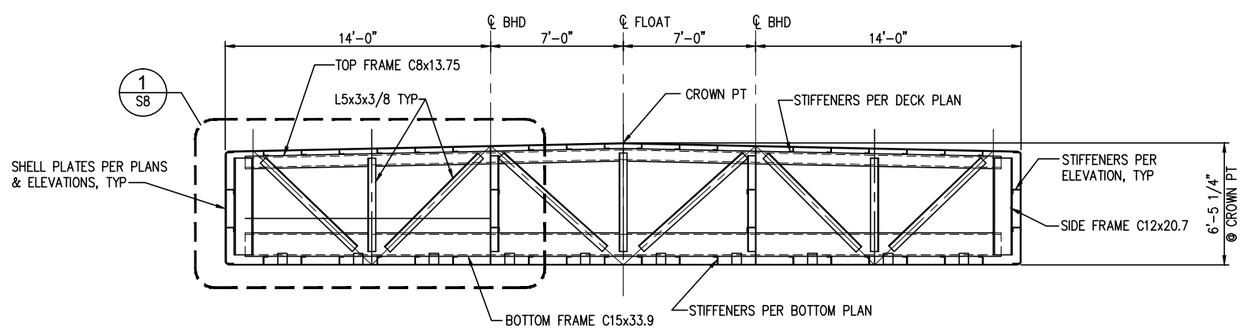

NOTES:
1. PROVIDE COMPLETE PENETRATION WELD OF C8 CHANNEL AT CROWN POINT.

C/S3 INTERNAL FRAME ELEVATION LOOKING AFT

SCALE: 1/4" = 1'-0" 1/S2

AS-BUILT

REVISIONS		
NO.	DATE	DESCRIPTION
1	10/10/2016	AS-BUILT

WATER EMERGENCY TRANSPORTATION AUTHORITY
WETA

kpff Consulting Engineers
1601 Fifth Avenue, Suite 1600
Seattle, Washington 98101
(206) 622-5822 Fax (206) 622-8130

CONSULTANT

SEAL/SIGNATURE

DESIGNED BY: DPE
DRAWN BY: MG
CHECKED BY: KN

PROJECT: WATER EMERGENCY TRANSPORTATION AUTHORITY PASSENGER FLOAT

TITLE: STRUCTURAL ELEVATIONS

DATE: 12/01/2014
SHEET 13 OF 35
DRAWING NO. S3
JOB NO.

Plotted: Oct 11, 2016 – 3:27pm taunies Layout: Layout1
V:\114129 (Dutra-WETA Pax Float)\05 CAD\Passenger Float\PF_AS-BUILTS\114129-S03.dwg

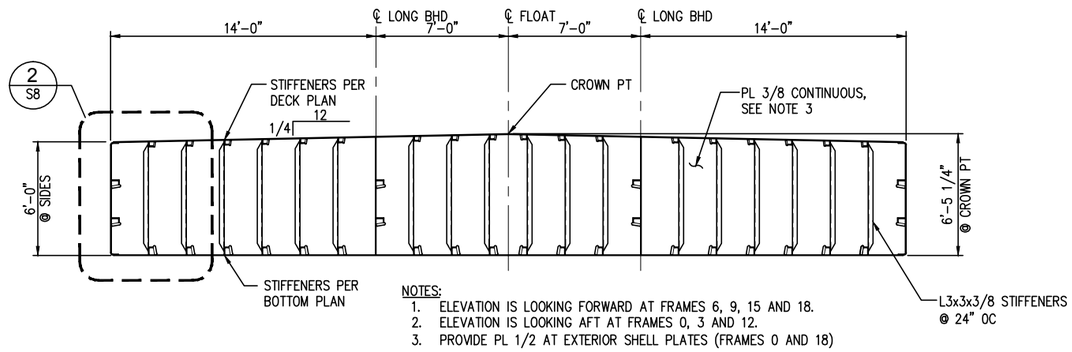

NOTES:
1. ELEVATION IS LOOKING FORWARD AT FRAMES 6, 9, 15 AND 18.
2. ELEVATION IS LOOKING AFT AT FRAMES 0, 3 AND 12.
3. PROVIDE PL 1/2 AT EXTERIOR SHELL PLATES (FRAMES 0 AND 18)

A/S4 TRANSVERSE BULKHEAD ELEVATION

SCALE: 1/4" = 1'-0" 1/S2, A/S14

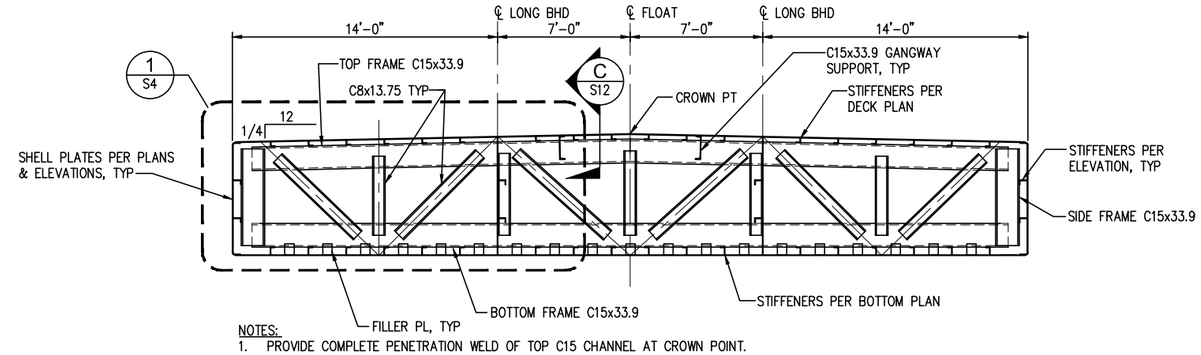

NOTES:
1. PROVIDE COMPLETE PENETRATION WELD OF TOP C15 CHANNEL AT CROWN POINT.

D/S4 INTERNAL FRAMES 16 AND 17 LOOKING AFT

SCALE: 1/4" = 1'-0" 1/S2

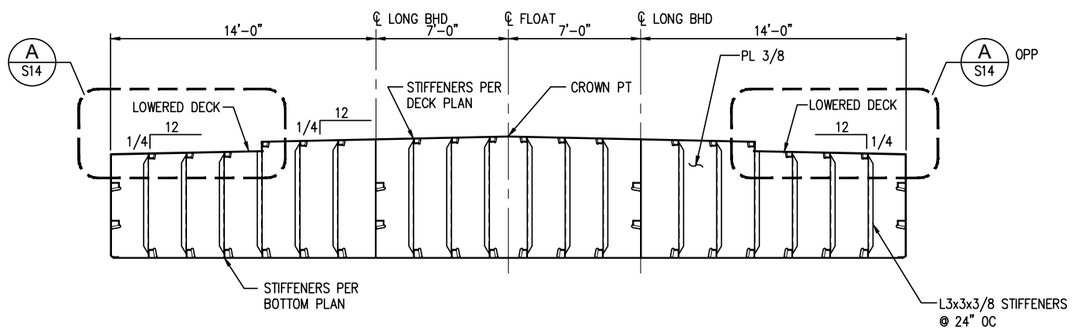

B/S4 TRANSVERSE BULKHEAD AT LOWERED DECK LOOKING FORWARD

SCALE: 1/4" = 1'-0" 1/S2

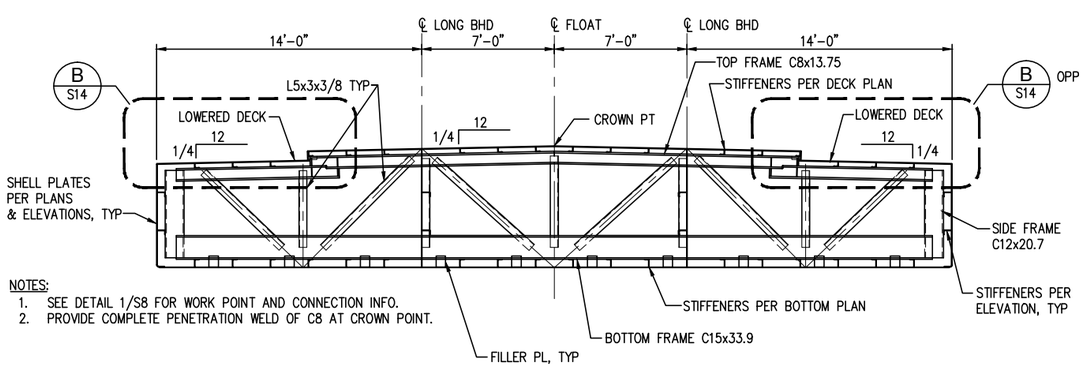

NOTES:
1. SEE DETAIL 1/S8 FOR WORK POINT AND CONNECTION INFO.
2. PROVIDE COMPLETE PENETRATION WELD OF C8 AT CROWN POINT.

C/S4 INTERNAL FRAME AT LOWERED DECK LOOKING FORWARD

SCALE: 1/4" = 1'-0" 1/S2

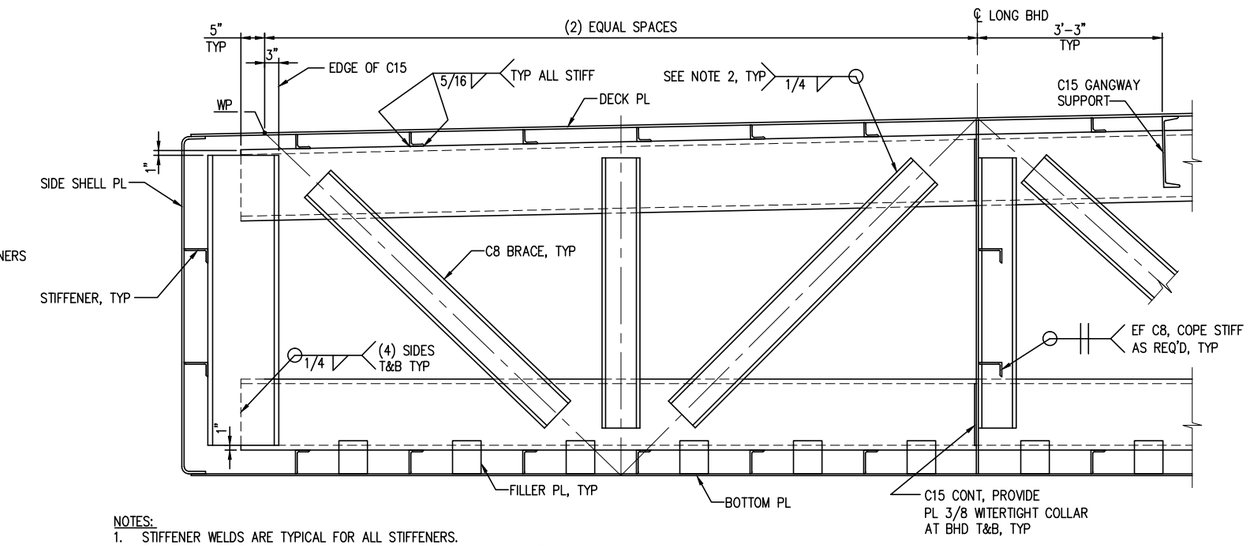

NOTES:
1. STIFFENER WELDS ARE TYPICAL FOR ALL STIFFENERS.
2. TOTAL WELD LENGTH AT EACH END OF EACH BRACE SHALL BE 20" MINIMUM. IN ADDITION, BRACE SHALL EXTEND TO MID DEPTH OF CHANNELS AT A MINIMUM.
3. ALL WELDS SHALL BE CONTINUOUS WITHIN BALLAST TANKS. SEE SHEET S2 FOR LOCATIONS (WATERTIGHT).
4. SEE DETAIL 1/S8 FOR SHELL, STIFFENER AND FILLER PLATE FABRICATION AND CONNECTION INFORMATION.

1/S4 INTERNAL FRAMES 16 AND 17 DETAIL

SCALE: 3/4" = 1'-0" D/S4

AS-BUILT

REVISIONS		
NO.	DATE	DESCRIPTION
1	10/10/2016	AS-BUILT

WATER EMERGENCY TRANSPORTATION AUTHORITY
WETA

kpff Consulting Engineers
1601 Fifth Avenue, Suite 1600
Seattle, Washington 98101
(206) 622-5822 Fax (206) 622-8130

CONSULTANT

SEAL/SIGNATURE

DESIGNED BY: DPE
DRAWN BY: MG
CHECKED BY: KN

PROJECT: WATER EMERGENCY TRANSPORTATION AUTHORITY PASSENGER FLOAT

TITLE: STRUCTURAL ELEVATIONS

DATE: 12/01/2014
SHEET 14 OF 35
DRAWING NO. S4
JOB NO.

Plotted: Oct 13, 2016 – 10:58am taunea Layout: Layout1
V:\114129 (Dutra-WETA Pax Float)\05 CAD\Passenger Float\PF_AS-BUILTS\114129-S04.dwg

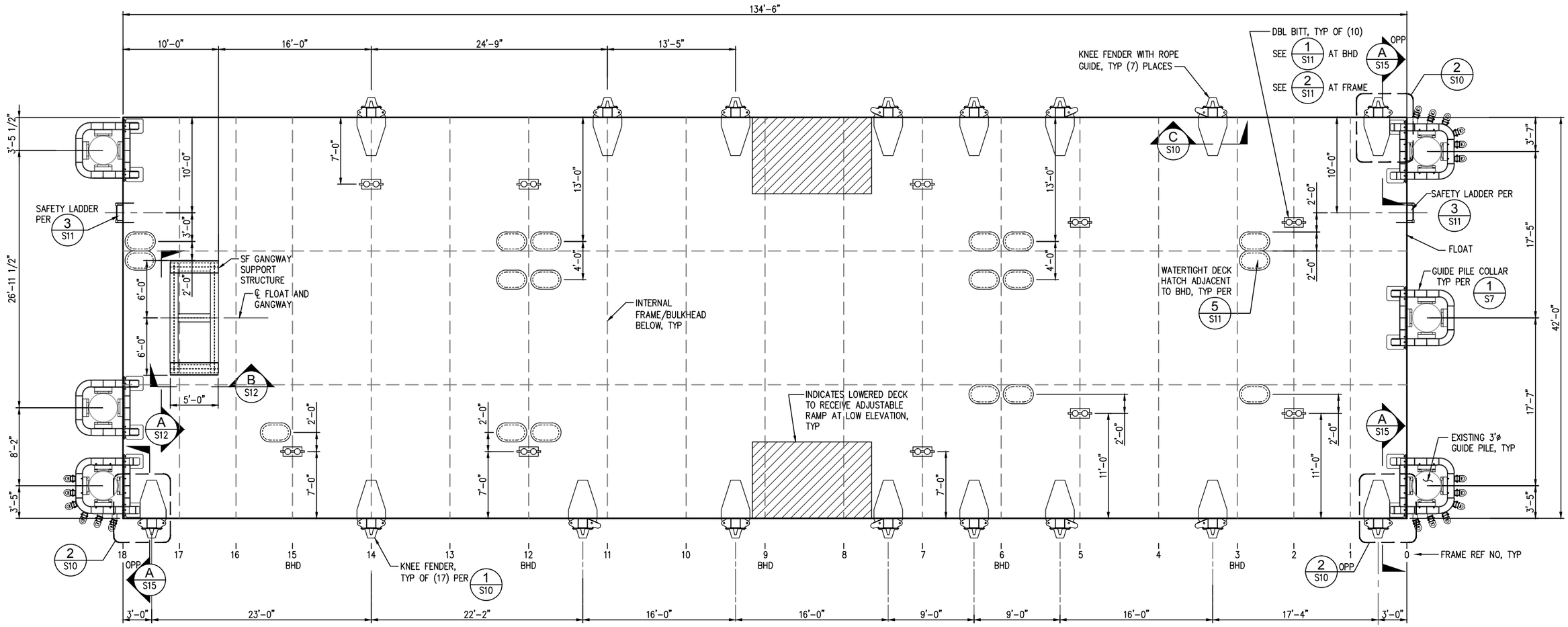

1/S5 STRUCTURAL PLAN - MISCELLANEOUS STEEL

SCALE: 3/16" = 1'-0"

G3

NOTES:

1. FOR COMPARTMENT LADDER AT DECK HATCHES SEE 4/S11.
2. MISCELLANEOUS STEEL DECK REINFORCING TO BE COORDINATED WITH VERTICAL SUPPORT FRAMING OF SUPERSTRUCTURE PROVIDED BY TOPPER INDUSTRIES, INC.
3. UNLESS SHOWN OTHERWISE, FENDERS AND BITTS SHALL BE MIRRORED ON OPPOSITE SIDE OF FLOAT.

AS-BUILT

REVISIONS		
NO.	DATE	DESCRIPTION
1	10/10/2016	AS-BUILT

WATER EMERGENCY TRANSPORTATION AUTHORITY
WETA

kpff Consulting Engineers
1601 Fifth Avenue, Suite 1600
Seattle, Washington 98101
(206) 622-5822 Fax (206) 622-8130

CONSULTANT

SEAL/SIGNATURE

DESIGNED BY: DPE
DRAWN BY: MG
CHECKED BY: KN

PROJECT: WATER EMERGENCY TRANSPORTATION AUTHORITY PASSENGER FLOAT

TITLE: STRUCTURAL PLAN - MISCELLANEOUS STEEL

DATE: 12/01/2014
SHEET 15 OF 35
DRAWING NO. S5
JOB NO.

Plotted: Oct 13, 2016 – 11:00am taunieo Layout: Layout1
V:\114129 (Dutra-WETA Pax Float)\05 CAD\Passenger Float\PF_AS-BUILTS\114129-S05.dwg

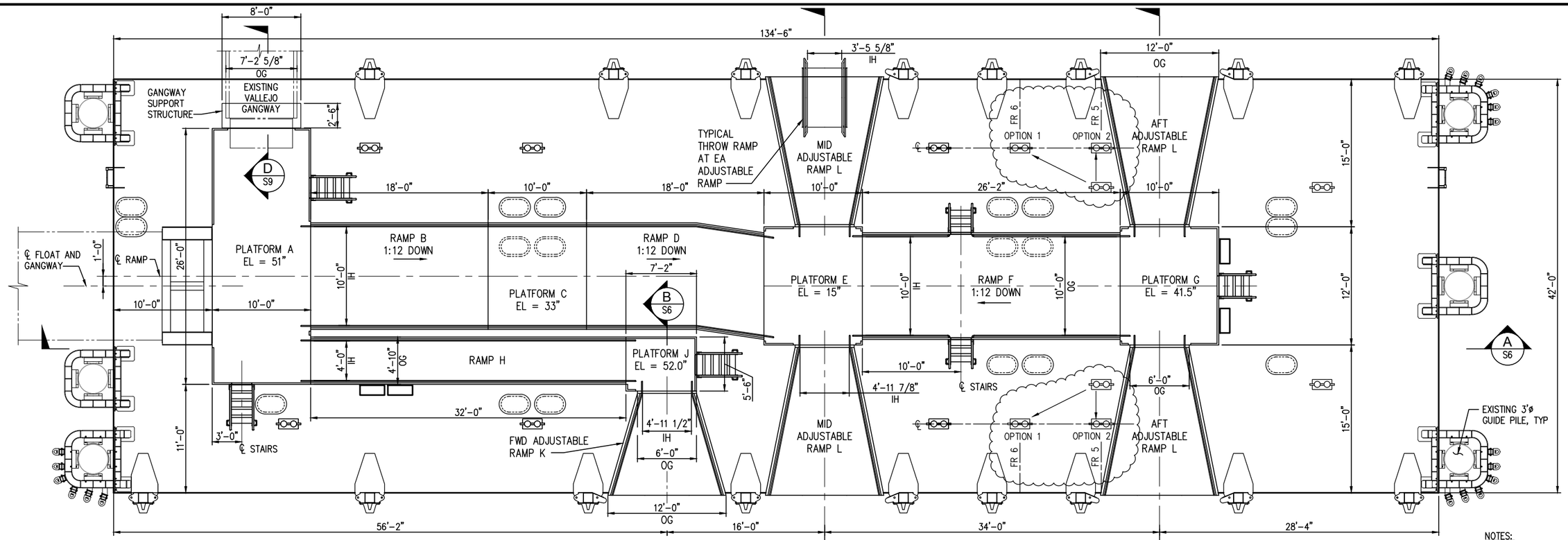

C S6 PLAN VIEW
G3

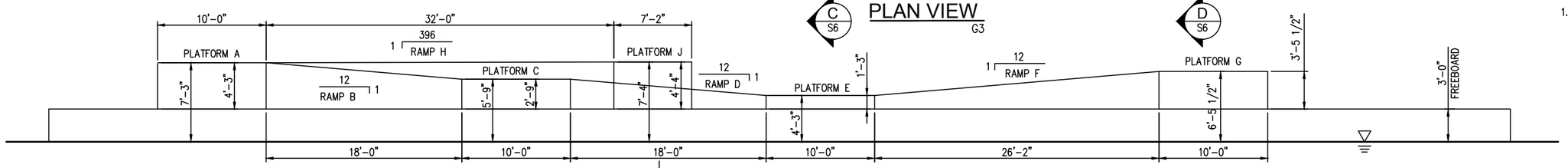

NOTES:

1. PASSENGER OPERATIONS WHEN MOVABLE RAMPS ARE OUTSIDE ADA COMPLIANT RANGE ARE AT OPERATOR'S DISCRETION AND MUST CONSIDER SAFETY, DYNAMICS OF VESSEL OPERATION, VARIABLE VESSEL FREEBOARDS, USE OF THROW RAMPS, AND READY ASSISTANCE FROM CREW MEMBERS FOR PASSENGERS WHO MAY NEED ASSISTANCE IN EMBARKING OR DEBARKING.

2. SUPERSTRUCTURE ABOVE FLOAT DECK TO BE SUPPLIED BY TOPPER INDUSTRIES, INC. THIS INCLUDES FIXED RAMPS AND PLATFORMS, ADJUSTABLE RAMPS, THROW RAMPS, RAILINGS, STAIRS, AND VALLEJO GANGWAY SUPPORT STRUCTURE.

NOTE: GUARDRAILS NOT SHOWN

A S6 SIDE ELEVATION
SCALE: NOT TO SCALE

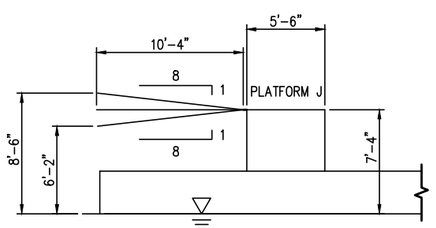

NOTE: GUARDRAILS NOT SHOWN

B S6 FWD BOARDING ELEVATIONS
SCALE: NOT TO SCALE

	FB	DECK
HIGH	102	66
LOW	74	38
RANGE*	28	28

* FULL ROM IS ± 14". ADA COMPLIANT ROM (1:12 SLOPE) IS ± 10".

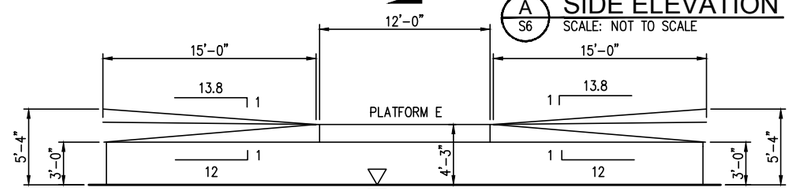

NOTE: GUARDRAILS NOT SHOWN

C S6 MID BOARDING ELEVATIONS
SCALE: NOT TO SCALE

	FB	DECK
HIGH	64	28
LOW	36	0
RANGE*	28	28

* FULL ROM IS ADA COMPLIANT.

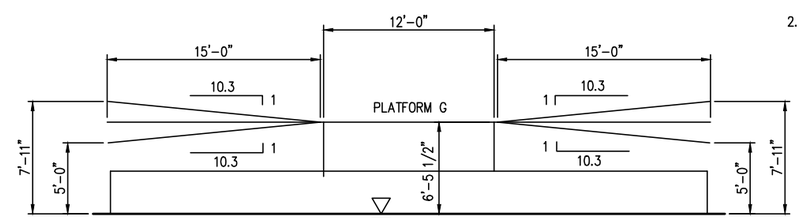

NOTE: GUARDRAILS NOT SHOWN

D S6 AFT BOARDING ELEVATIONS
SCALE: NOT TO SCALE

	FB	DECK
HIGH	95	59
LOW	60	24
RANGE*	35	35

* FULL ROM IS ± 17 1/2". ADA COMPLIANT ROM (1:12 SLOPE) IS ± 15".

AS-BUILT

REVISIONS		
NO.	DATE	DESCRIPTION
1	10/10/2016	AS-BUILT

WATER EMERGENCY TRANSPORTATION AUTHORITY
WETA

kpff Consulting Engineers
1601 Fifth Avenue, Suite 1600
Seattle, Washington 98101
(206) 622-5822 Fax (206) 622-8130

CONSULTANT

SEAL/SIGNATURE

DESIGNED BY: DPE
DRAWN BY: MG
CHECKED BY: KN

PROJECT: WATER EMERGENCY TRANSPORTATION AUTHORITY PASSENGER FLOAT

TITLE: SUPERSTRUCTURE PLAN & ELEVATIONS

DATE: 12/01/2014
SHEET 16 OF 35
DRAWING NO. S6
JOB NO.

Plotted: Oct 13, 2016 – 11:01am taunlea Layout: Layout1
V:\114129 (Dutra-WETA Pax Float)\05 CAD\Passenger Float\PF_AS-BUILTS\114129-S06.dwg

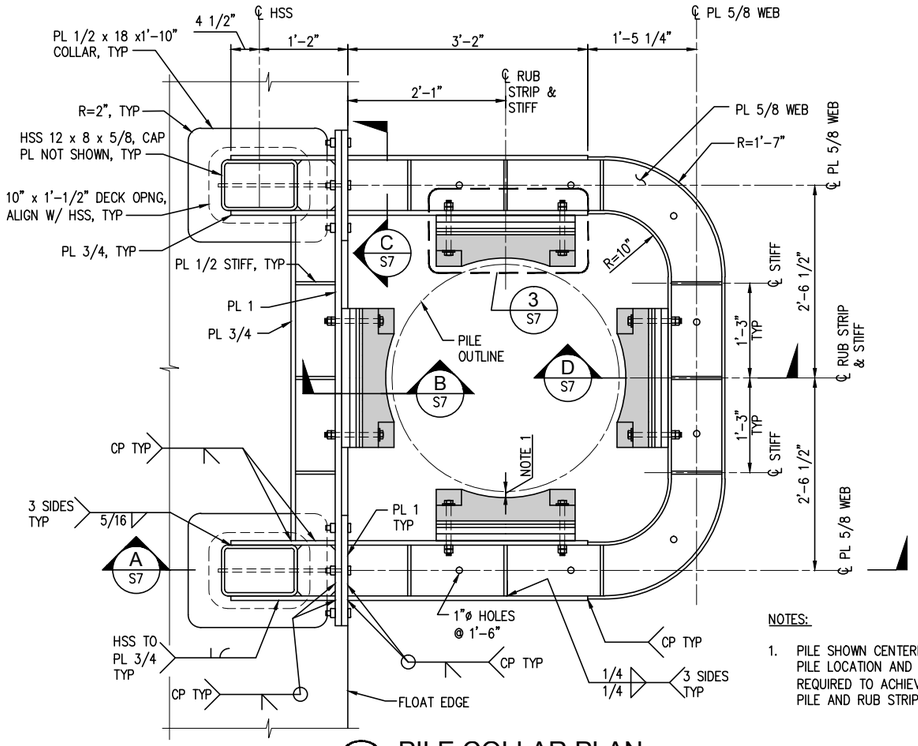

NOTES:

1. PILE SHOWN CENTERED IN COLLAR. FIELD VERIFY PILE LOCATION AND ADJUST RUB STRIP SHIMS AS REQUIRED TO ACHIEVE MAXIMUM 1" GAP BETWEEN PILE AND RUB STRIP AT ALL 4 RUB STRIPS.

1/S7 PILE COLLAR PLAN

SCALE: 1" = 1'-0" S5, 1/S15

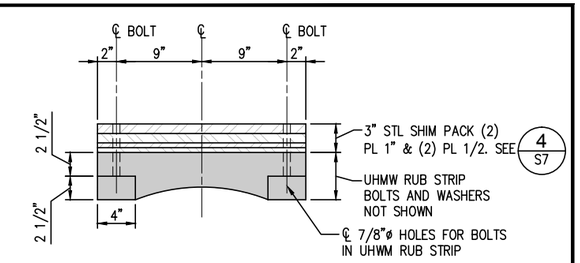

3/S7 LOWER RUB STRIP DETAIL

SCALE: 1 1/2" = 1'-0" 1/S7

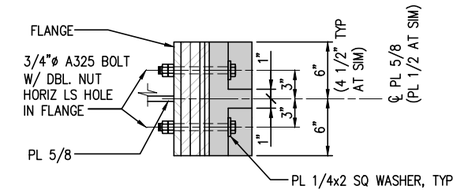

B/S7 RUB STRIP SECTION

SCALE: 1 1/2" = 1'-0" 1/S7

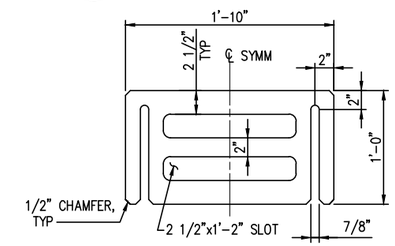

NOTE: PROVIDE UHMW SHIMS AT SIMILAR

4/S7 SHIM DETAIL

SCALE: 1 1/2" = 1'-0" 3/S7

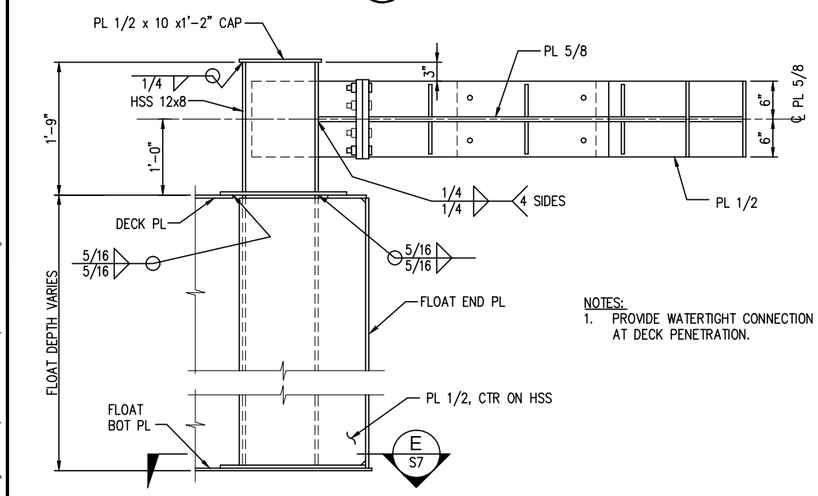

NOTES:

1. PROVIDE WATERTIGHT CONNECTION AT DECK PENETRATION.

A/S7 GUIDE PILE COLLAR SECTION

SCALE: 1" = 1'-0" 1/S7

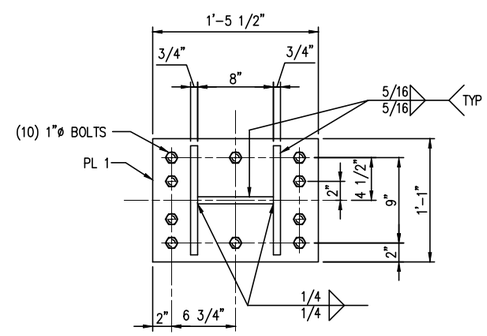

C/S7 SECTION

SCALE: 1 1/2" = 1'-0" 1/S7

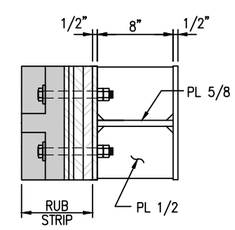

D/S7 SECTION

SCALE: 1 1/2" = 1'-0" 1/S7

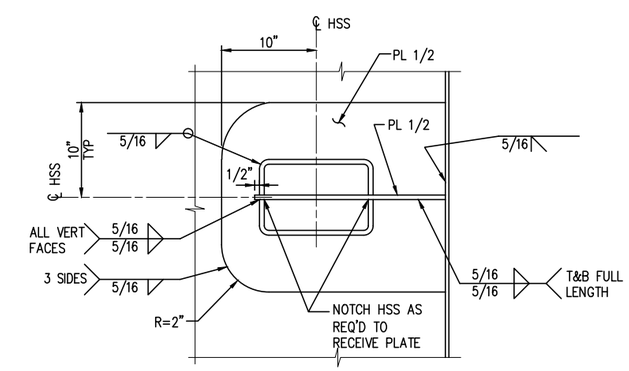

E/S7 SECTION

SCALE: 1 1/2" = 1'-0" A/S7

AS-BUILT

REVISIONS		
NO.	DATE	DESCRIPTION
1	10/10/2016	AS-BUILT

WATER EMERGENCY TRANSPORTATION AUTHORITY
WETA

kpff Consulting Engineers
1601 Fifth Avenue, Suite 1600
Seattle, Washington 98101
(206) 622-5822 Fax (206) 622-8130

CONSULTANT

SEAL/SIGNATURE

DESIGNED BY: DPE
DRAWN BY: MG
CHECKED BY: KN

PROJECT: WATER EMERGENCY TRANSPORTATION AUTHORITY PASSENGER FLOAT

TITLE: GUIDE PILE COLLAR DETAILS

DATE: 12/01/2014
SHEET 17 OF 35
DRAWING NO. S7
JOB NO.

Plotted: Oct 13, 2016 – 11:06am taunieo Layout: Layout1
V:\114129 (Dutra-WETA Pax Float)\05 CAD\Passenger Float\PF_AS-BUILTS\114129-S07.dwg

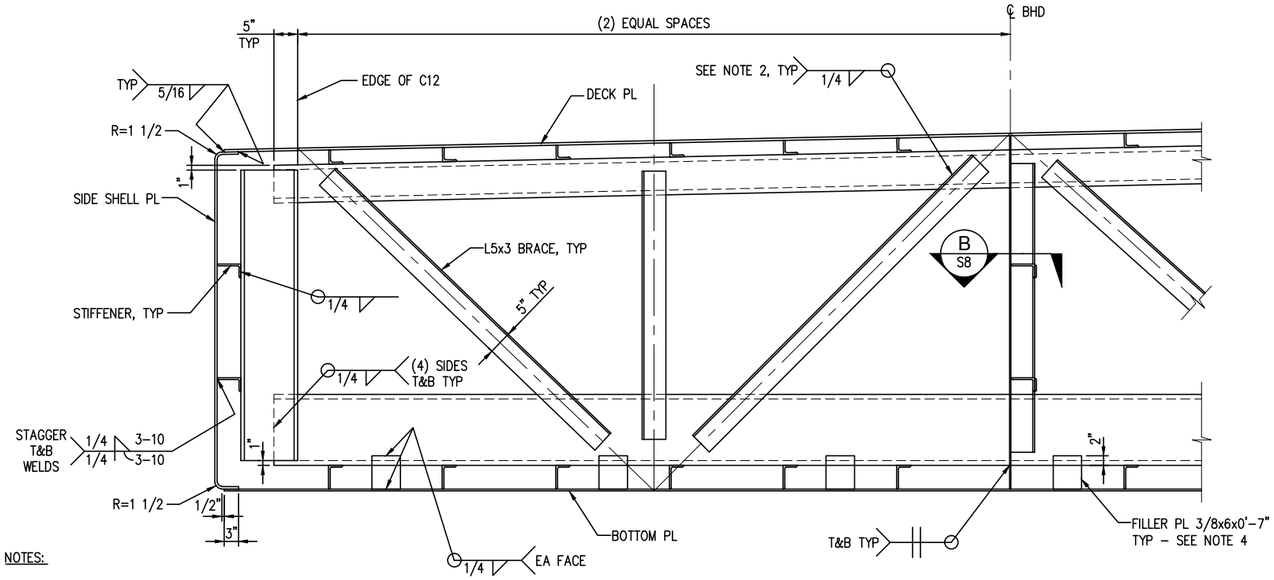

NOTES:

1. STIFFENER WELDS ARE TYPICAL FOR ALL STIFFENERS.
2. TOTAL WELD LENGTH AT EACH END OF EACH BRACE SHALL BE 20" MINIMUM. IN ADDITION, BRACE SHALL EXTEND TO MID-DEPTH OF CHANNELS AT A MINIMUM.
3. ALL WELDS SHALL BE CONTINUOUS WITHIN BALLAST TANKS. SEE SHEET S2 FOR LOCATIONS (WATERTIGHT).
4. PROVIDE FILLER PLATES AT EVERY OTHER STIFFENER BAY AT BOTTOM CHORD OF EACH C-FRAME. PROVIDE AT EVERY BAY FOR FRAMES 1, 2, 16, AND 17.

1/S8 INTERNAL FRAME DETAIL

SCALE: 3/4" = 1'-0" C/S3, C/S4, D/S4

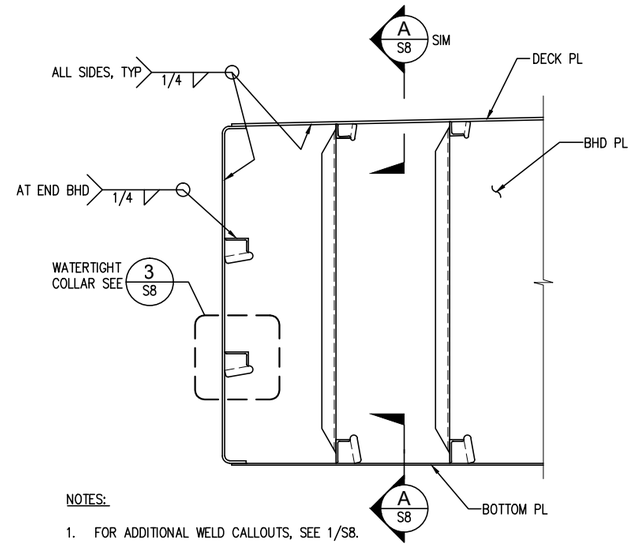

NOTES:

1. FOR ADDITIONAL WELD CALLOUTS, SEE 1/S8.
2. STIFFENER WELDS ARE TYPICAL FOR ALL STIFFENERS.

2/S8 BULKHEAD DETAIL

SCALE: 3/4" = 1'-0" A/S4

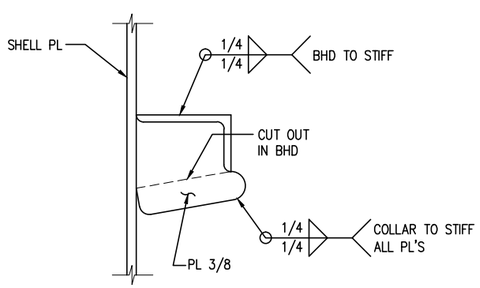

3/S8 WATERTIGHT COLLAR

SCALE: 3" = 1'-0" 2/S8, A/S14

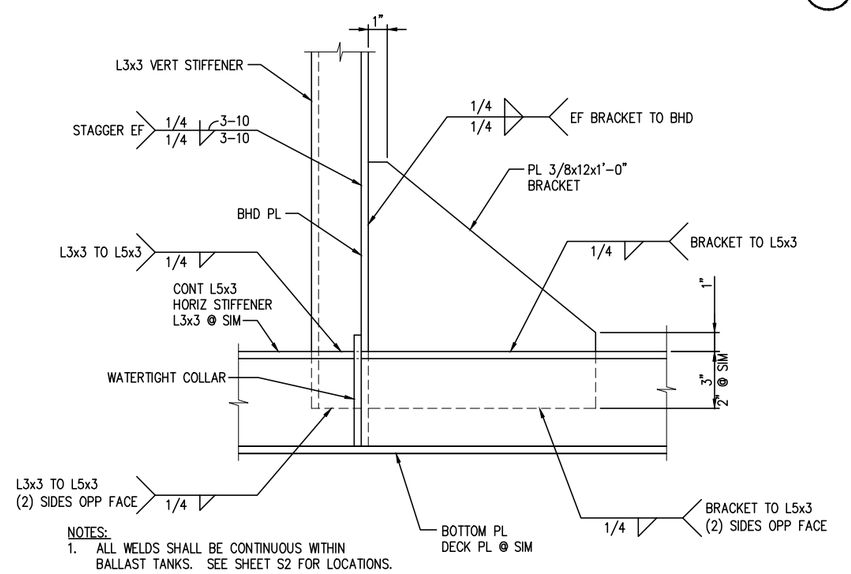

NOTES:

1. ALL WELDS SHALL BE CONTINUOUS WITHIN BALLAST TANKS. SEE SHEET S2 FOR LOCATIONS.

A/S8 TYPICAL STIFFENERS AT TRANSVERSE BULKHEAD

SCALE: 3" = 1'-0" 2/S8

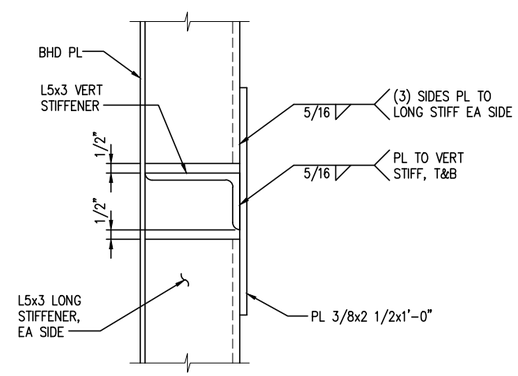

B/S8 SECTION

SCALE: 3" = 1'-0" 1/S8

AS-BUILT

REVISIONS		
NO.	DATE	DESCRIPTION
1	10/10/2016	AS-BUILT

WATER EMERGENCY TRANSPORTATION AUTHORITY
WETA

kpff Consulting Engineers
1601 Fifth Avenue, Suite 1600
Seattle, Washington 98101
(206) 622-5822 Fax (206) 622-8130

CONSULTANT

SEAL/SIGNATURE

DESIGNED BY: DPE
DRAWN BY: MG
CHECKED BY: KN

PROJECT: WATER EMERGENCY TRANSPORTATION AUTHORITY PASSENGER FLOAT

TITLE: HULL STEEL DETAILS

DATE: 12/01/2014
SHEET 18 OF 35
DRAWING NO. S8
JOB NO.

Plotted: Oct 13, 2016 - 11:19am taunieo Layout: Layout1
V:\114129 (Dutra-WETA Pax Float)\05 CAD\Passenger Float\PF_AS-BUILTS\114129-S08.dwg

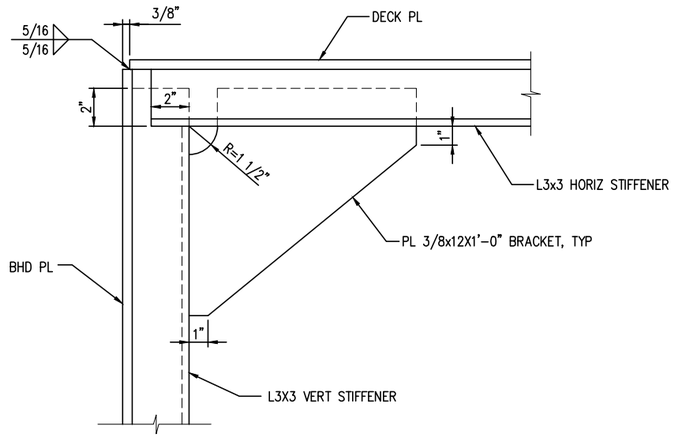

NOTES:

1. OPP HAND AT AFT END.
2. FOR ADDITIONAL WELD INFO, SEE B/S9.

A/S9 FORWARD END CONNECTION - TOP

SCALE: 3" = 1'-0" 1/S2, C/S14

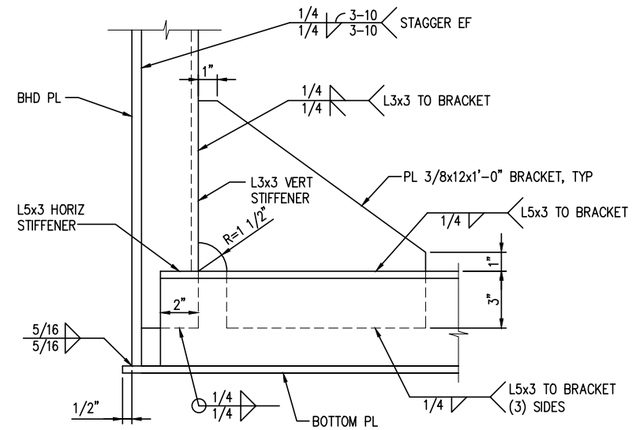

NOTES:

1. OPP HAND AT AFT END.
2. ALL WELDS SHALL BE CONTINUOUS WITHIN BALLAST TANKS. SEE SHEET S2 FOR LOCATIONS.

B/S9 FORWARD END CONNECTION - BOTTOM

SCALE: 3" = 1'-0" 2/S2, A/S9

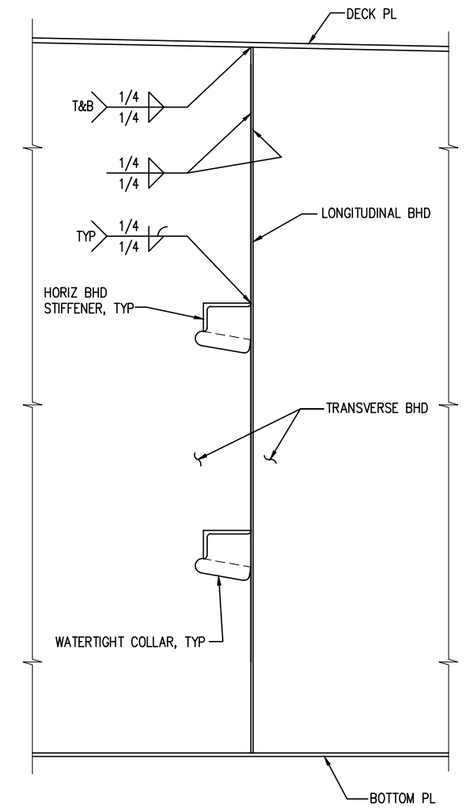

C/S9 TYPICAL BULKHEAD TO BULKHEAD

SCALE: 1 1/2" = 1'-0" B/S3

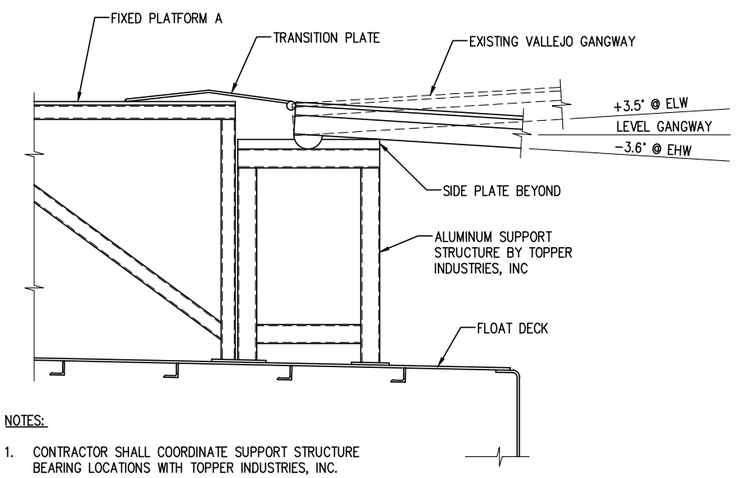

NOTES:

1. CONTRACTOR SHALL COORDINATE SUPPORT STRUCTURE BEARING LOCATIONS WITH TOPPER INDUSTRIES, INC.
2. GUARDRAILS/RAILINGS NOT SHOW FOR CLARITY.

D/S9 GANGWAY SUPPORT SECTION

SCALE: 3/4" = 1'-0" 1/S6

AS-BUILT

REVISIONS		
NO.	DATE	DESCRIPTION
1	10/10/2016	AS-BUILT

WATER EMERGENCY TRANSPORTATION AUTHORITY
WETA

kpff Consulting Engineers
1601 Fifth Avenue, Suite 1600
Seattle, Washington 98101
(206) 622-5822 Fax (206) 622-8130

CONSULTANT

SEAL/SIGNATURE

DESIGNED BY: DPE
DRAWN BY: MG
CHECKED BY: KN

PROJECT: WATER EMERGENCY TRANSPORTATION AUTHORITY PASSENGER FLOAT

TITLE: HULL STEEL DETAILS

DATE: 12/01/2014
SHEET 19 OF 35
DRAWING NO. S9
JOB NO.

Plotted: Oct 13, 2016 – 11:21am taurieo Layout: Layout1
V:\114129 (Dutra-WETA Pax Float)\05 CAD\Passenger Float\PF_AS-BUILTS\114129-S09.dwg

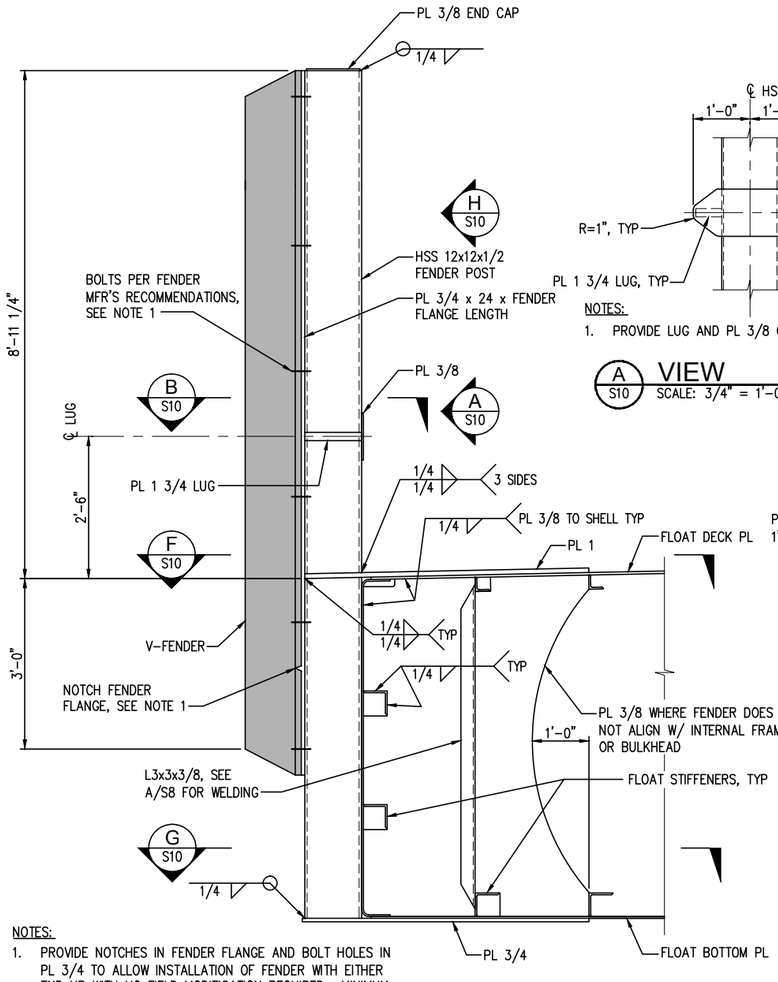

NOTES:

1. PROVIDE NOTCHES IN FENDER FLANGE AND BOLT HOLES IN PL 3/4 TO ALLOW INSTALLATION OF FENDER WITH EITHER END UP WITH NO FIELD MODIFICATION REQUIRED. MINIMUM QUANTITY OF BOLTS PER FENDER MANUFACTURER'S INSTRUCTIONS AND RECOMMENDATIONS.

1 S10 KNEE FENDER DETAIL

SCALE: 3/4" = 1'-0" S5, 2/S10

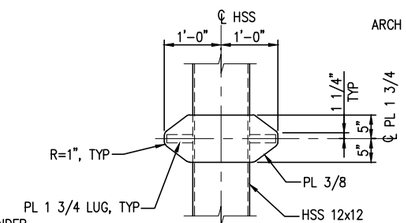

NOTES:

1. PROVIDE LUG AND PL 3/8 ONE SIDE ONLY AT SIM.

A S10 VIEW

SCALE: 3/4" = 1'-0" 1/S10, C/S10

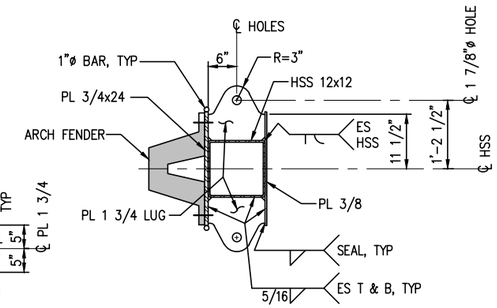

NOTES:

1. PROVIDE LUG AND PL 3/8 ONE SIDE ONLY AT SIM.

B S10 SECTION

SCALE: 3/4" = 1'-0" 1/S10, D/S10

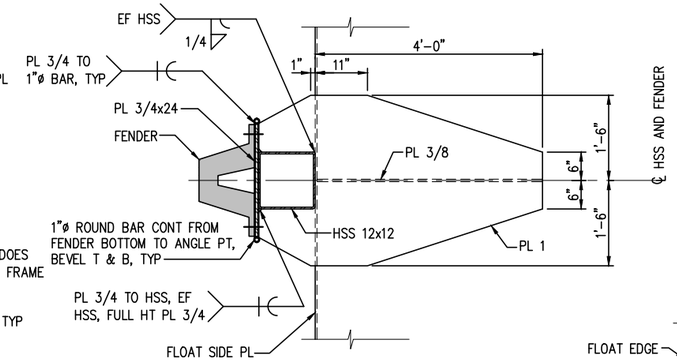

F S10 SECTION

SCALE: 3/4" = 1'-0" 1/S10

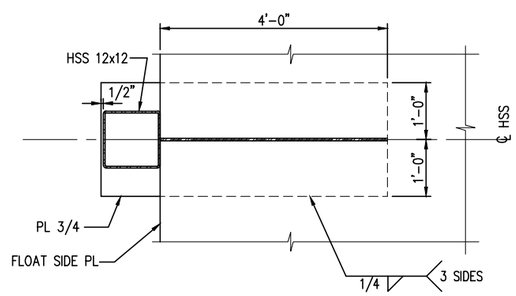

NOTE: STIFFENERS NOT SHOWN

G S10 SECTION

SCALE: 3/4" = 1'-0" 1/S10

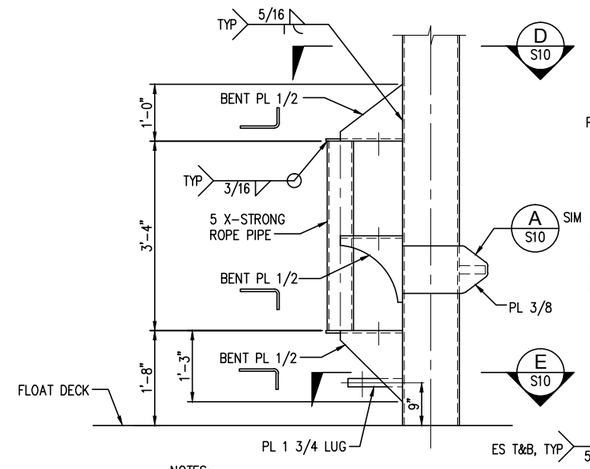

NOTES:

1. ALL PLATE EDGES CONTACTED BY ROPE SHALL HAVE A 1/4" RADIUS.
2. LEFT-HAND ROPE GUIDE SHOWN, RIGHT HAND ROPE GUIDE OPPOSITE HAND.

C S10 KNEE FENDER WITH ROPE GUIDE

SCALE: 3/4" = 1'-0" S5

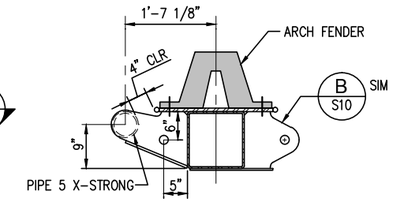

D S10 SECTION

SCALE: 3/4" = 1'-0" C/S10

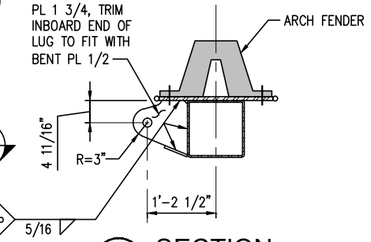

E S10 SECTION

SCALE: 3/4" = 1'-0" C/S10

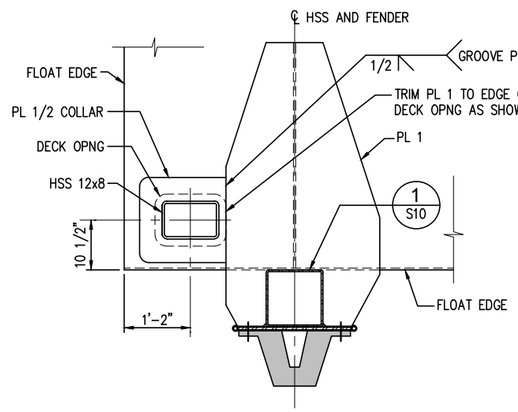

NOTES:

1. PROVIDE AT FORWARD/PORT PILE AND AFT/STARBOARD PILE, OPPOSITE HAND AT AFT/PORT PILE.

2 S10 KNEE FENDER AT CORNER PILE

SCALE: 3/4" = 1'-0" S5

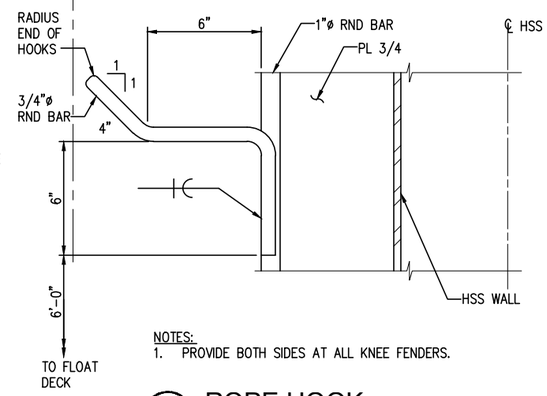

NOTES:

1. PROVIDE BOTH SIDES AT ALL KNEE FENDERS.

H S10 ROPE HOOK

SCALE: 3" = 1'-0" 1/S10

AS-BUILT

REVISIONS		
NO.	DATE	DESCRIPTION
1	10/10/2016	AS-BUILT

WATER EMERGENCY TRANSPORTATION AUTHORITY
WETA

kpff Consulting Engineers
1601 Fifth Avenue, Suite 1600
Seattle, Washington 98101
(206) 622-5822 Fax (206) 622-8130

CONSULTANT

SEAL/SIGNATURE

DESIGNED BY: DPE
DRAWN BY: MG
CHECKED BY: KN

PROJECT: WATER EMERGENCY TRANSPORTATION AUTHORITY PASSENGER FLOAT

TITLE: KNEE FENDER DETAILS

DATE: 12/01/2014
SHEET 20 OF 35
DRAWING NO. S10
JOB NO.

Plotted: Oct 13, 2016 – 2:32pm taurieo Layout: Layout1
V:\114129 (Dutra-WETA Pax Float)\05 CAD\Passenger Float\PF_AS-BUILTS\114129-S10.dwg

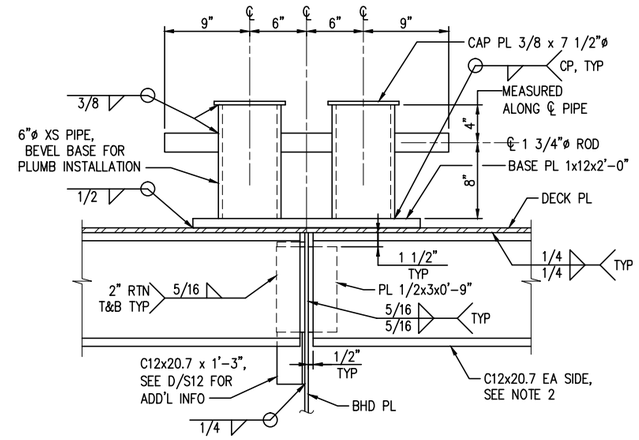

NOTES:

1. CENTER BITT ASSEMBLY OVER WEB OF C8 FRAME AND BETWEEN ADJACENT L3x3 LONGITUDINAL STIFFENERS.
2. C12x20.7 SHALL EXTEND TO ADJACENT TRANSVERSE FRAME EACH SIDE. FOR CONNECTION TO ADJACENT FRAME REFER TO 2/S11.
3. ALL WELDS SHALL BE CONTINUOUS WITHIN BALLAST TANKS. SEE SHEET S2 FOR LOCATIONS.

1/S11 DOUBLE BITT AT BHD DETAIL

SCALE: 1 1/2" = 1'-0" — S5, 2/S11

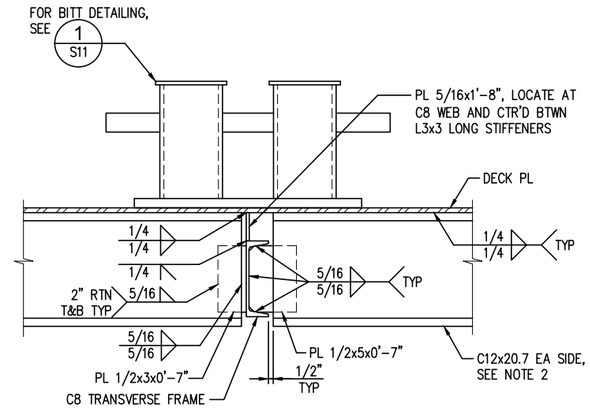

NOTES:

1. CENTER BITT ASSEMBLY OVER WEB OF C8 FRAME AND BETWEEN ADJACENT L3x3 LONGITUDINAL STIFFENERS.
2. C12x20.7 SHALL EXTEND TO ADJACENT TRANSVERSE FRAME OR BULKHEAD EACH SIDE. FOR CONNECTION TO ADJACENT FRAME REFER TO THIS DETAIL. FOR CONNECTION AT ADJACENT BULKHEAD REFER TO 1/S11.
3. ALL WELDS SHALL BE CONTINUOUS WITHIN BALLAST TANKS. SEE SHEET S2 FOR LOCATIONS.

2/S11 DOUBLE BITT AT FRAME DETAIL

SCALE: 1 1/2" = 1'-0" — S5, 1/S11

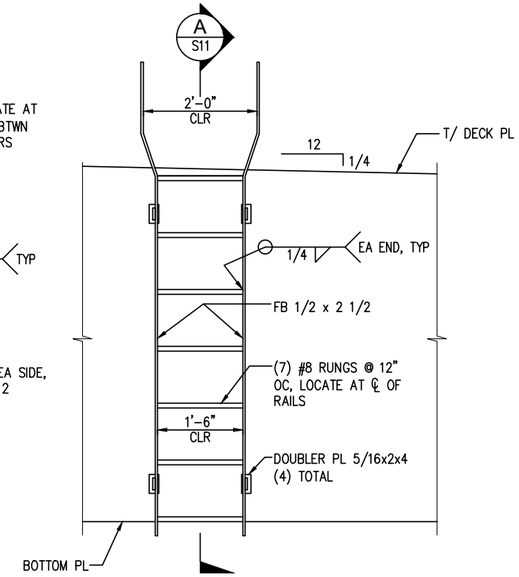

3/S11 SAFETY LADDER DETAIL

SCALE: 3/4" = 1'-0" — S5

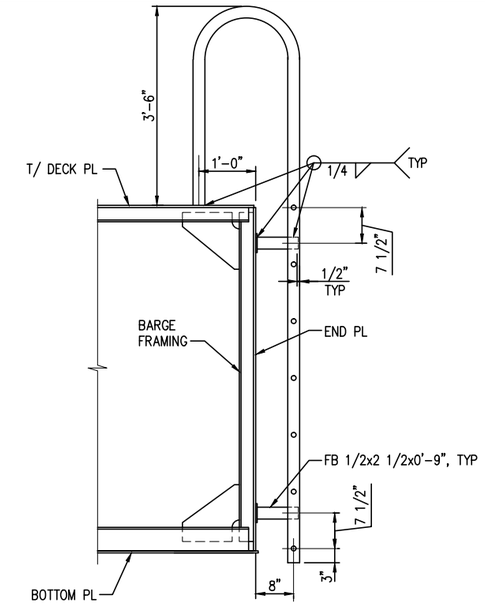

A/S11 SAFETY LADDER SECTION

SCALE: 3/4 = 1'-0" — 3/S11

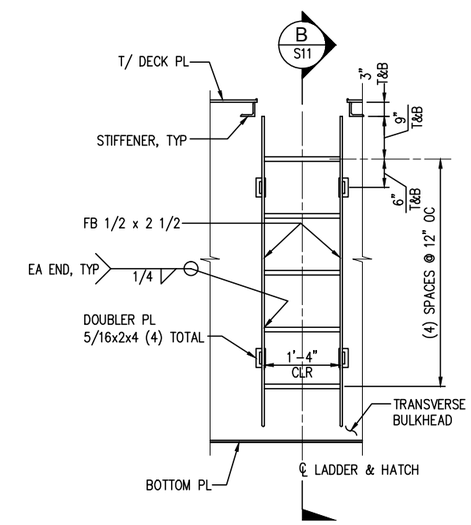

NOTE: STIFFENERS NOT SHOWN FOR CLARITY

4/S11 HULL COMPARTMENT LADDER DETAIL

SCALE: 3/4" = 1'-0" — S5

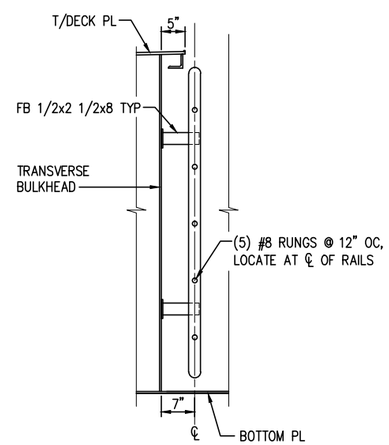

NOTE: STIFFENERS NOT SHOWN FOR CLARITY

B/S11 HULL COMPARTMENT LADDER SECTION

SCALE: 3/4" = 1'-0" — 4/S11

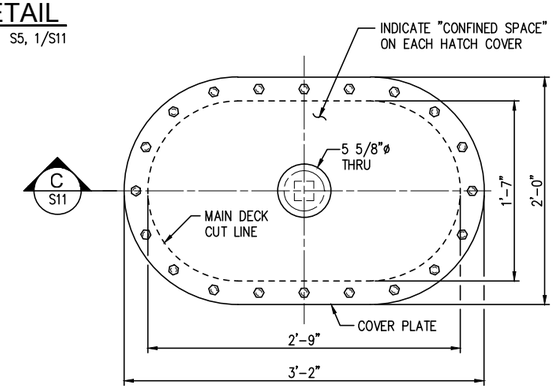

NOTES:

1. HANDLES NOT SHOWN FOR CLARITY
2. THE INTENT OF THIS DETAIL IS FOR FABRICATION AND INSTALLATION OF THE ENTIRE MANHOLE ASSEMBLY INCLUDING COVER PLATE, BOLT RING, HALF COUPLING, SALVAGE PLUGS, BOLTING HARDWARE, AND WELDING.
3. QTY. (18) TOTAL MANHOLE COVERS ON MAIN DECK.
4. UTILIZE A HATCH ASSEMBLY THAT MINIMIZES THE QUANTITY OF BOLTS FOR EASE OF REMOVAL.

5/S11 WATERTIGHT DECK HATCH DETAIL

SCALE: 1 1/2"=1'-0" — S5

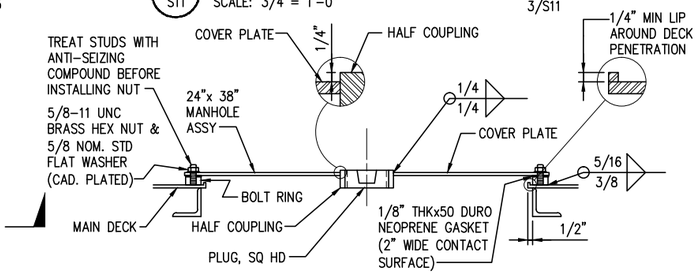

C/S11 WATERTIGHT DECK HATCH SECTION

SCALE: 1 1/2"=1'-0" — 5/S11

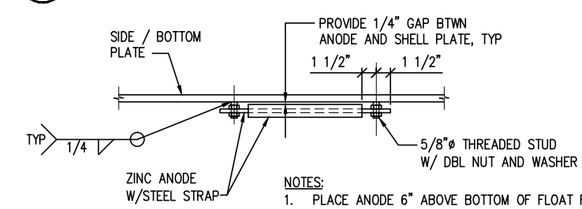

NOTES:

1. PLACE ANODE 6" ABOVE BOTTOM OF FLOAT FOR SIDE PLATE LOCATIONS TO ENSURE ANODE IS FULLY SUBMERGED AT ALL TIMES.
2. DO NOT PAINT THREADED STUDS, NUTS, WASHERS AND STEEL STRAPS IN ORDER TO MAINTAIN METAL TO METAL CONTACT

6/S11 ZINC ANODE DETAIL

SCALE: 1 1/2" = 1'-0" — 2/S2

AS-BUILT

REVISIONS		
NO.	DATE	DESCRIPTION
1	10/10/2016	AS-BUILT

WATER EMERGENCY TRANSPORTATION AUTHORITY
WETA

kpff Consulting Engineers
1601 Fifth Avenue, Suite 1600
Seattle, Washington 98101
(206) 622-5822 Fax (206) 622-8130

CONSULTANT

SEAL/SIGNATURE

DESIGNED BY: DPE
DRAWN BY: MG
CHECKED BY: KN

PROJECT: WATER EMERGENCY TRANSPORTATION AUTHORITY PASSENGER FLOAT

TITLE: MISCELLANEOUS DETAILS

DATE: 12/01/2014
SHEET 21 OF 35
DRAWING NO. S11
JOB NO.

Plotted: Oct 13, 2016 – 11:43am taunieo Layout: Layout1
V:\114129 (Dutra-WETA Pax Float)\05 CAD\Passenger Float\PF_AS-BUILTS\114129-S11.dwg

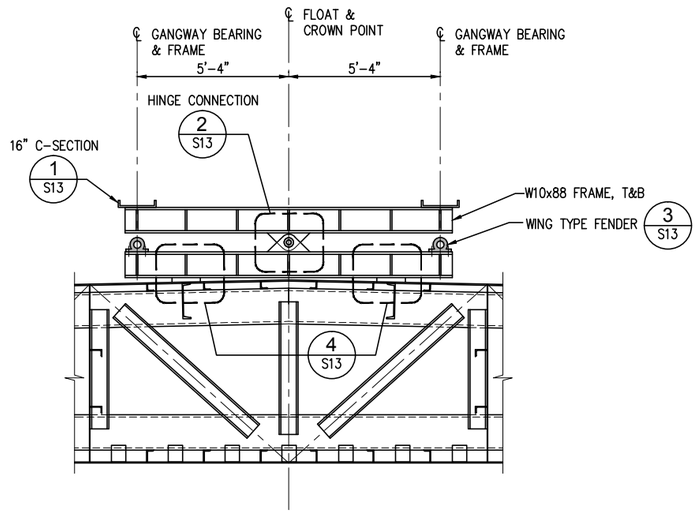

A S12 GANGWAY SUPPORT STRUCTURE ELEVATION
SCALE: 3/8" = 1'-0" S5

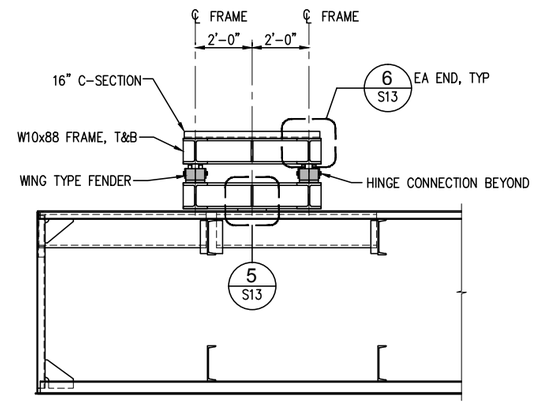

B S12 GANGWAY SUPPORT STRUCTURE ELEVATION
SCALE: 3/8" = 1'-0" S5

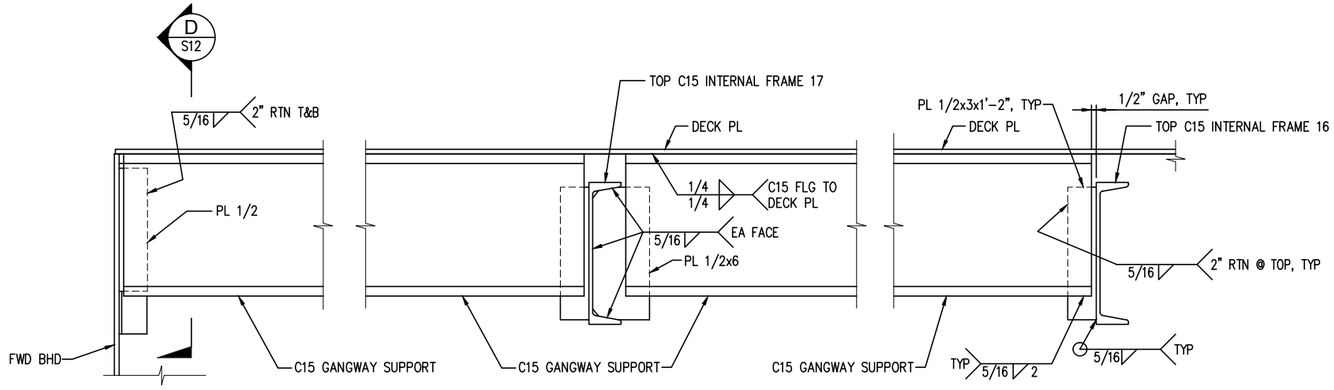

C S12 GANGWAY SUPPORT CONNECTIONS
SCALE: 1 1/2" = 1'-0" D/S4

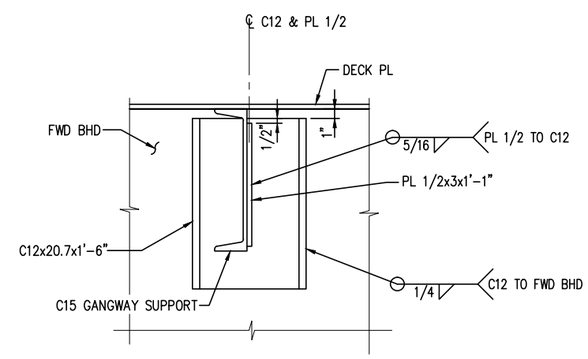

D S12 SECTION
SCALE: 1 1/2" = 1'-0" C/S12

AS-BUILT

REVISIONS		
NO.	DATE	DESCRIPTION
1	10/10/2016	AS-BUILT

WATER EMERGENCY TRANSPORTATION AUTHORITY
WETA

kpff Consulting Engineers
1601 Fifth Avenue, Suite 1600
Seattle, Washington 98101
(206) 622-5822 Fax (206) 622-8130

CONSULTANT

SEAL/SIGNATURE

DESIGNED BY: DPE
DRAWN BY: MG
CHECKED BY: KN

PROJECT: WATER EMERGENCY TRANSPORTATION AUTHORITY PASSENGER FLOAT

TITLE: GANGWAY SUPPORT DETAILS

DATE: 12/01/2014
SHEET 22 OF 35
DRAWING NO. S12
JOB NO.

Plotted: Oct 13, 2016 – 11:50am taunieo Layout: Layout1
V:\114129 (Dutra-WETA Pax Float)\05 CAD\Passenger Float\PF_AS-BUILTS\114129-S12.dwg

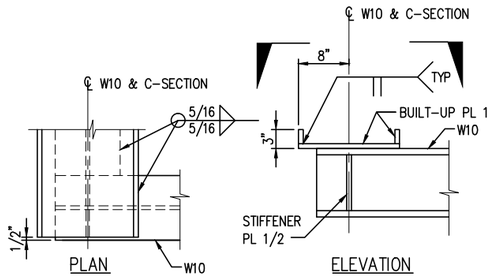

1 S13 DETAIL
SCALE: 1" = 1'-0" A/S12

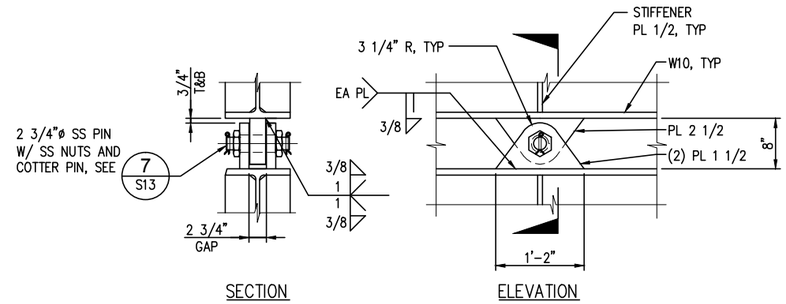

2 S13 HINGE DETAIL
SCALE: 1" = 1'-0" A/S12

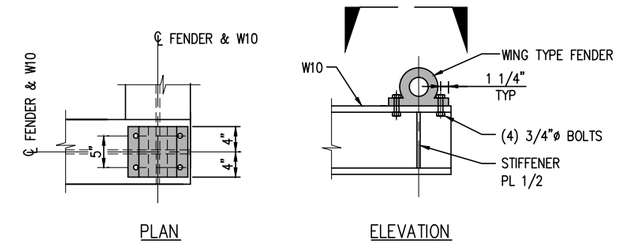

3 S13 DETAIL
SCALE: 1" = 1'-0" A/S12

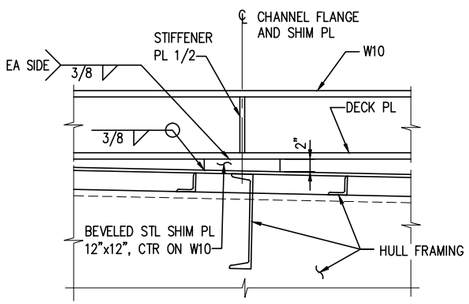

4 S13 DETAIL
SCALE: 1" = 1'-0" A/S12

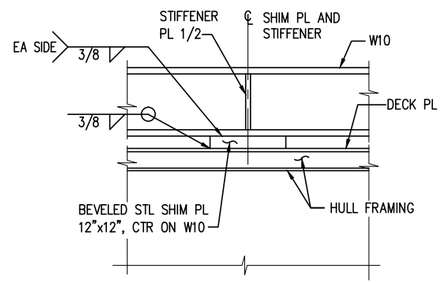

5 S13 DETAIL
SCALE: 1" = 1'-0" B/S12

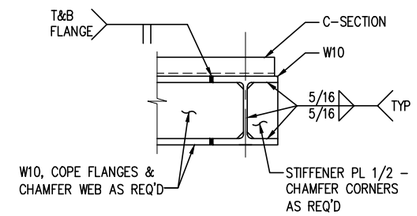

6 S13 DETAIL
SCALE: 1" = 1'-0" B/S12

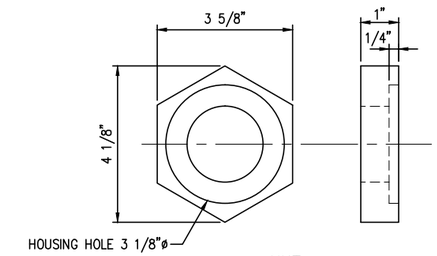

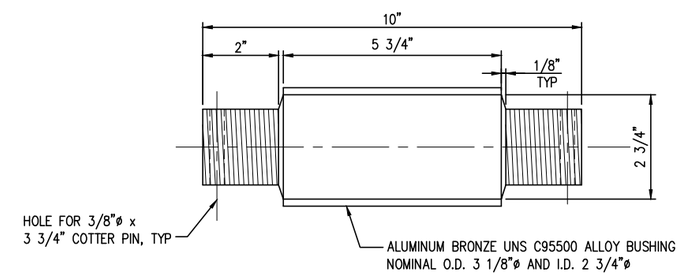

NOTES:

1. MATERIAL: A564 STAINLESS STEEL, TYPE 630, CONDITION H1150, 17-4 PH), MIN YIELD STRENGTH 105 KSI, MIN TENSILE STRENGTH 135 KSI.
2. CENTERLINE OF BORES IN PLATES SHALL ALIGN WITHIN 0.002" TOTAL INTERNAL REFLECTION. CENTERLINE OF FIXED BEARING PAIRS SHALL BE COLINEAR AND PARALLEL WITHIN 0.002" TOTAL INTERNAL REFLECTION.

7 S13 DETAIL - PIN
SCALE: 6" = 1'-0" 2/S13

AS-BUILT

REVISIONS		
NO.	DATE	DESCRIPTION
1	10/10/2016	AS-BUILT

WATER EMERGENCY TRANSPORTATION AUTHORITY
WETA

kpff Consulting Engineers
1601 Fifth Avenue, Suite 1600
Seattle, Washington 98101
(206) 622-5822 Fax (206) 622-8130

CONSULTANT

SEAL/SIGNATURE

DESIGNED BY: DPE
DRAWN BY: MG
CHECKED BY: KN

PROJECT: WATER EMERGENCY TRANSPORTATION AUTHORITY PASSENGER FLOAT

TITLE: GANGWAY SUPPORT DETAILS

DATE: 12/01/2014
SHEET 23 OF 35
DRAWING NO. S13
JOB NO.

Plotted: Oct 13, 2016 - 11:53am taunlea Layout: Layout1
V:\114129 (Dutra-WETA Pax Float)\05 CAD\Passenger Float\PF_AS-BUILTS\114129-S13.dwg

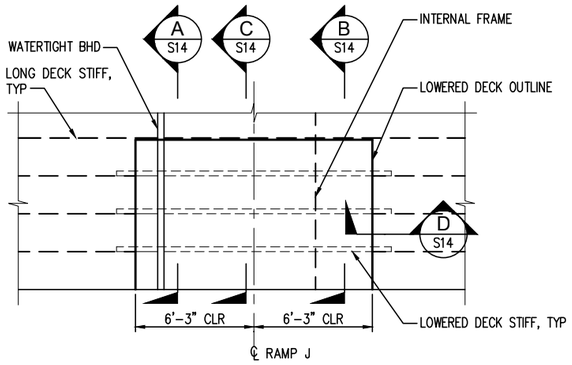

1/S14 LOWERED DECK PARTIAL PLAN

SCALE: 1/4" = 1'-0" 1/S2

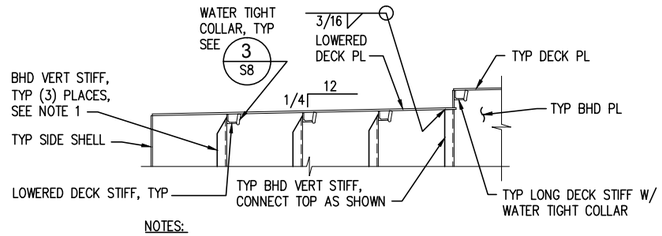

NOTES:

1. SEE A/S4 FOR VERTICAL STIFFENER FABRICATION AND CONNECTION INFORMATION.

A/S14 BULKHEAD AT LOWERED DECK LOOKING FORWARD

SCALE: 1/2" = 1'-0" B/S4, 1/S14

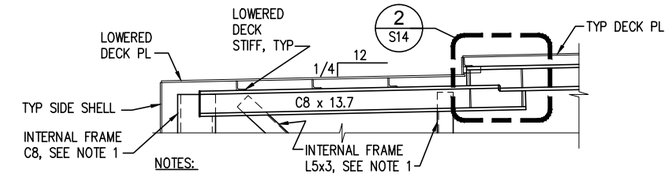

NOTES:

1. SEE 1/S8 FOR WORK POINT AND WELD INFORMATION.

B/S14 INTERNAL FRAME AT LOWERED DECK LOOKING FORWARD

SCALE: 1/2" = 1'-0" C/S4, 1/S14

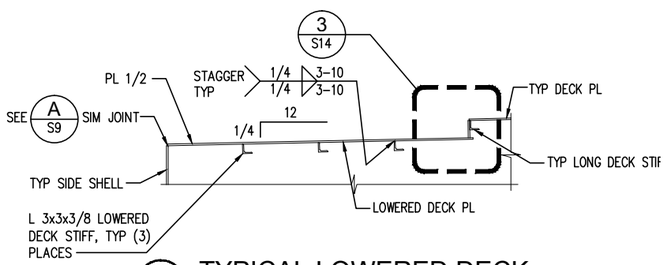

C/S14 TYPICAL LOWERED DECK

SCALE: 1/2" = 1'-0" 1/S14

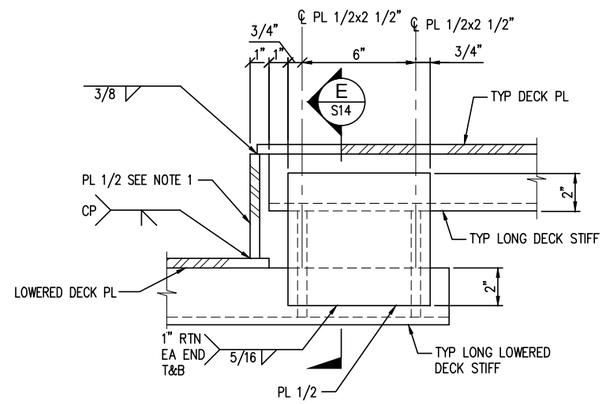

NOTES:

1. RADIUS SEAWARD UPPER CORNER TO MATCH TYP SIDE SHELL. SEAL EACH END WITH 3/16" FILLET WELD TO PROVIDE WATER TIGHT INSTALLATION.

D/S14 TRANSVERSE DECK STEP SECTION

SCALE: 3" = 1'-0" 1/S14

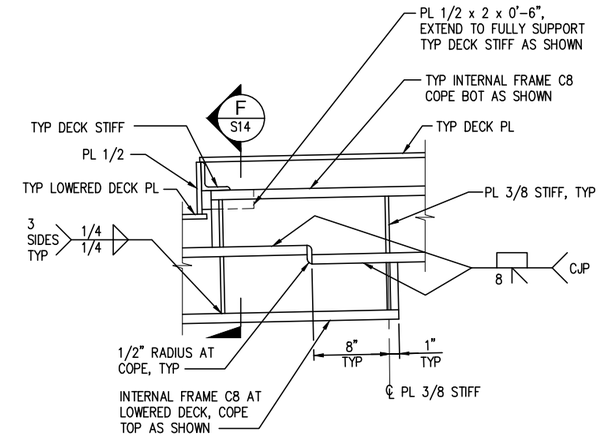

2/S14 INTERNAL FRAME C8 SPLICE AT LOWERED DECK DETAIL

SCALE: 1 1/2" = 1'-0" B/S14

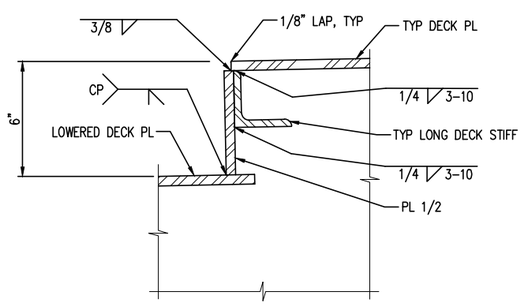

3/S14 LONGITUDINAL DECK STEP

SCALE: 3" = 1'-0" C/S14

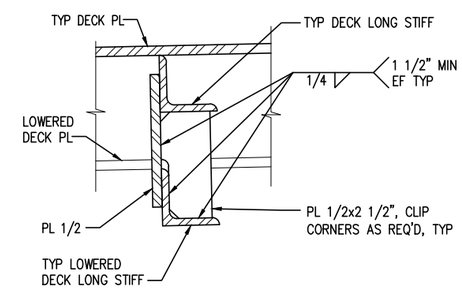

E/S14 STIFFENER SPLICE SECTION

SCALE: 3" = 1'-0" D/S14

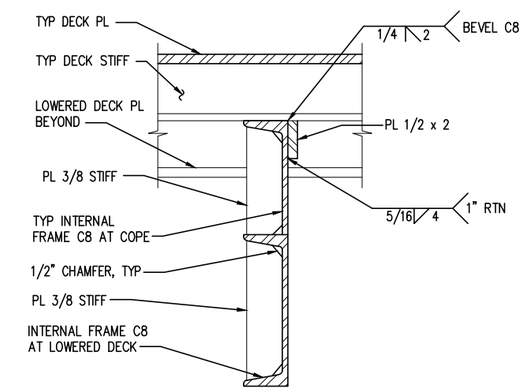

F/S14 INTERNAL FRAME C8 SPLICE SECTION

SCALE: 3" = 1'-0" 2/S14

AS-BUILT

REVISIONS		
NO.	DATE	DESCRIPTION
1	10/10/2016	AS-BUILT

WATER EMERGENCY TRANSPORTATION AUTHORITY
WETA

kpff Consulting Engineers
1601 Fifth Avenue, Suite 1600
Seattle, Washington 98101
(206) 622-5822 Fax (206) 622-8130

CONSULTANT

SEAL/SIGNATURE

DESIGNED BY: DPE
DRAWN BY: MG
CHECKED BY: KN

PROJECT: WATER EMERGENCY TRANSPORTATION AUTHORITY PASSENGER FLOAT

TITLE: LOWERED DECK DETAILS

DATE: 12/01/2014
SHEET 24 OF 35
DRAWING NO. S14
JOB NO.

Plotted: Oct 13, 2016 – 11:55am taunieo Layout: Layout1
V:\114129 (Dutra-WETA Pax Float)\05 CAD\Passenger Float\PF_AS-BUILTS\114129-S14.dwg

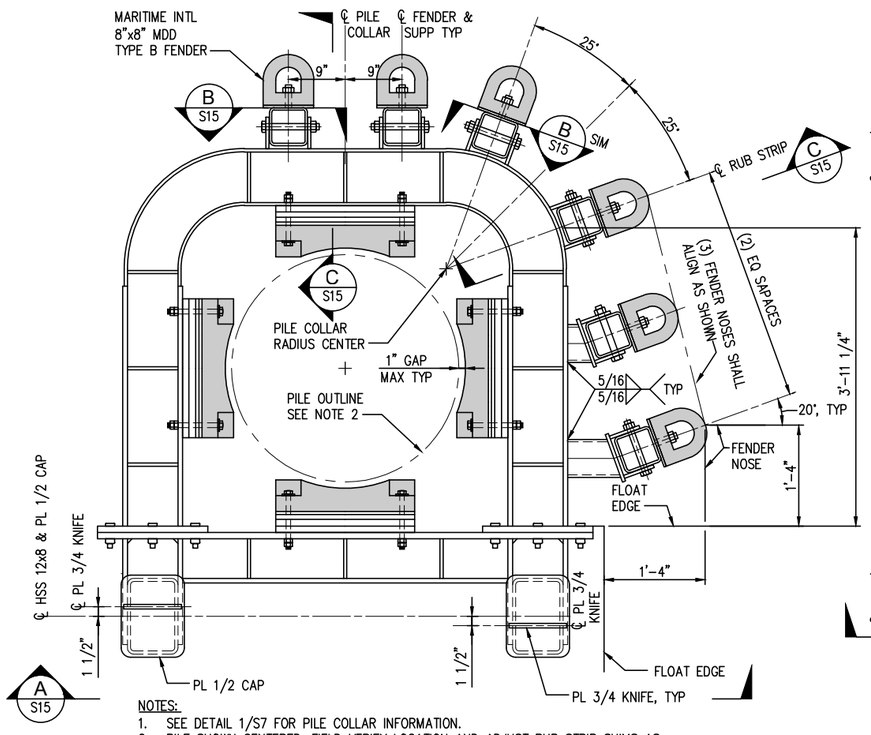

NOTES:
1. SEE DETAIL 1/S7 FOR PILE COLLAR INFORMATION.
2. PILE SHOWN CENTERED. FIELD VERIFY LOCATION AND ADJUST RUB STRIP SHIMS AS REQUIRED TO ACHIEVE SPECIFIED GAP ALL AROUND.

1 S15 LOWER GUIDE PILE COLLAR FENDER PLAN
SCALE: 1" = 1'-0" A/S15

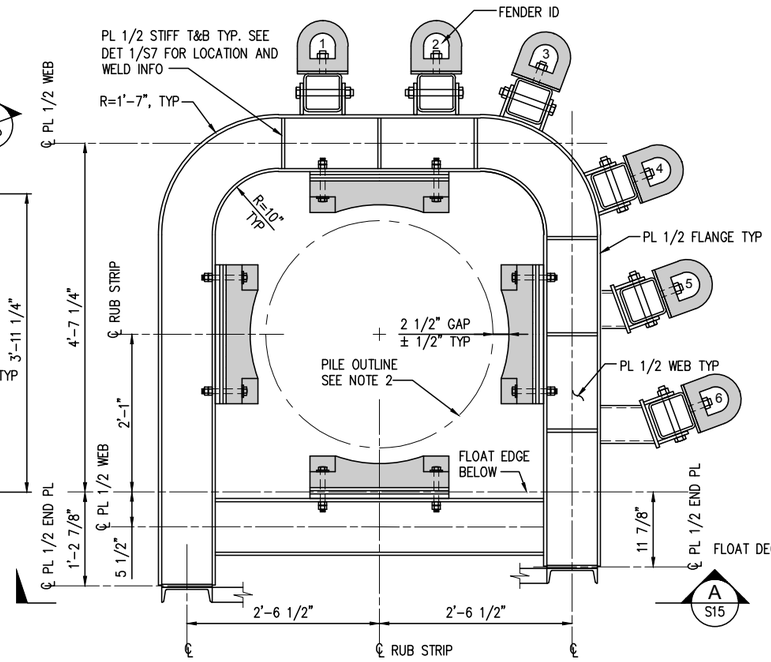

NOTES:
1. SEE C/S15 FOR FENDER LOCATIONS.
2. PILE SHOWN CENTERED. FIELD VERIFY LOCATION AND ADJUST RUB STRIP SHIMS AS REQUIRED TO ACHIEVE SPECIFIED GAP ALL AROUND.

2 S15 UPPER GUIDE PILE COLLAR FENDER PLAN
SCALE: 1" = 1'-0" A/S15

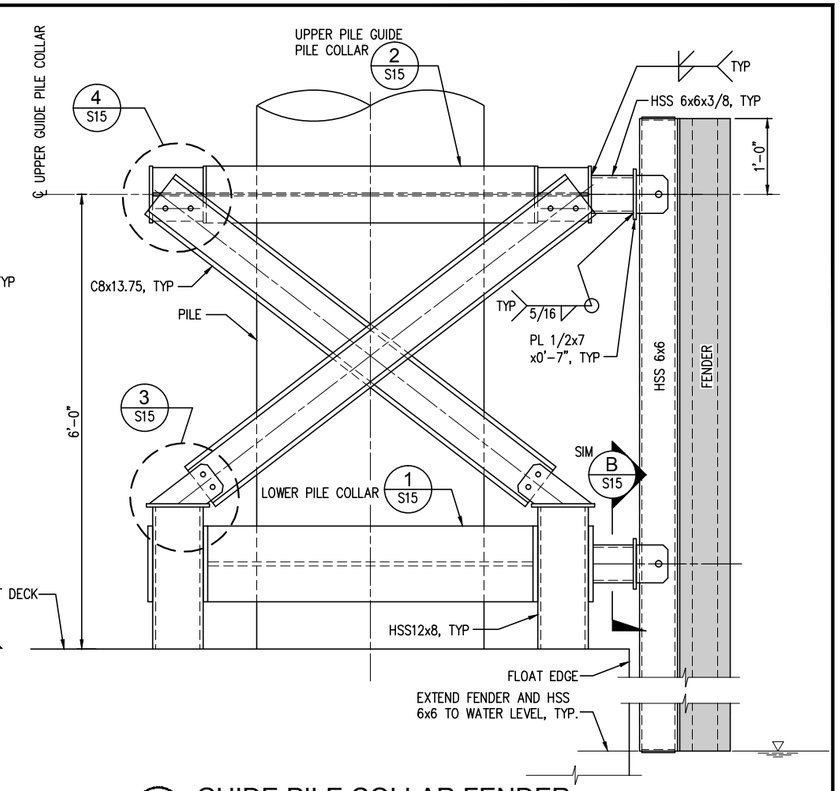

A S15 GUIDE PILE COLLAR FENDER
SCALE: 1" = 1'-0" S5, 1/S15, 2/S15

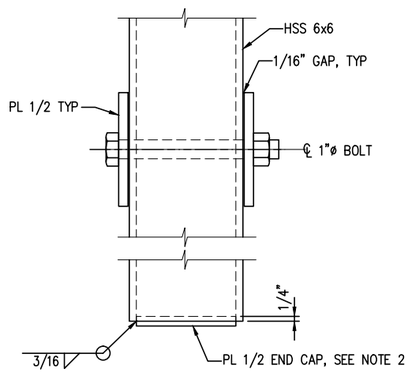

NOTES:
1. LOWER CONNECTION SHOWN, UPPER CONNECTION SIMILAR.
2. PROVIDE CAP AS SHOWN EACH END OF ALL HSS 6x6.
3. LAP GEOMETRY AND WELD SHOWN FOR SIM.

B S15 LOWER HSS CONNECTION
SCALE: 3" = 1'-0" 1/S15, A/S15

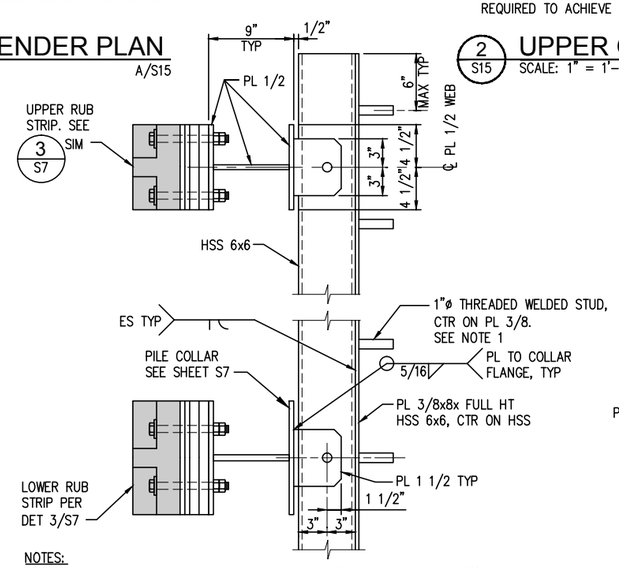

NOTES:
1. LENGTH AND TYPICAL SPACING OF STUDS PER FENDER MANUFACTURER'S RECOMMENDATION.
2. FENDER NOT SHOWN.
3. SIMILAR WHERE NO RUB STRIPS OCCUR.

C S15 SECTION
SCALE: 1 1/2" = 1'-0" 1/S15

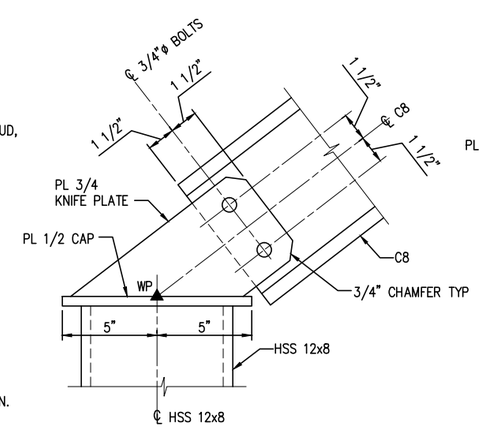

3 S15 C8 BOTTOM CONNECTION
SCALE: 3" = 1'-0" A/S15

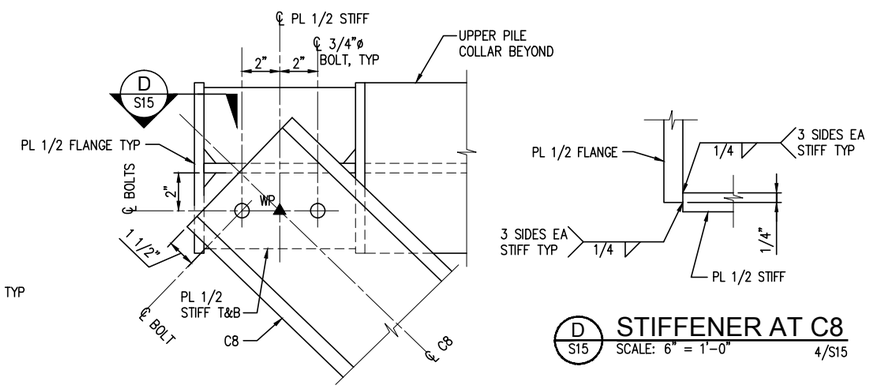

4 S15 C8 TOP CONNECTION
SCALE: 3" = 1'-0" A/S15

D S15 STIFFENER AT C8
SCALE: 6" = 1'-0" 4/S15

AS-BUILT

REVISIONS		
NO.	DATE	DESCRIPTION
1	10/10/2016	AS-BUILT

WATER EMERGENCY TRANSPORTATION AUTHORITY
WETA

kpff Consulting Engineers
1601 Fifth Avenue, Suite 1600
Seattle, Washington 98101
(206) 622-5822 Fax (206) 622-8130

CONSULTANT

SEAL/SIGNATURE

DESIGNED BY: DPE
DRAWN BY: MG
CHECKED BY: KN

PROJECT: WATER EMERGENCY TRANSPORTATION AUTHORITY PASSENGER FLOAT

TITLE: CORNER GUIDE PILE COLLAR/FENDER DETAILS

DATE: 12/01/2014
SHEET 25 OF 35
DRAWING NO. S15
JOB NO.

Plotted: Oct 13, 2016 – 11:57am taunlea Layout: Layout1
V:\114129 (Dutra-WETA Pax Float)\05 CAD\Passenger Float\PF_AS-BUILTS\114129-S15.dwg

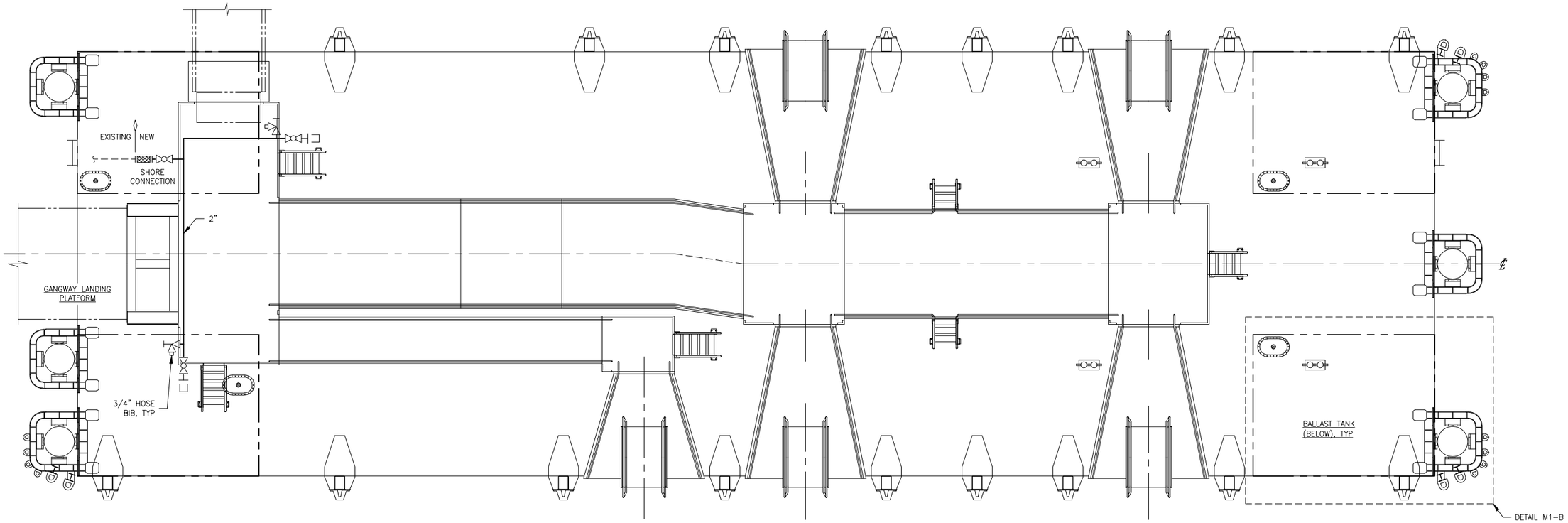

PLAN M1-A
FLOAT PIPING LAYOUT
PLAN VIEW
SCALE: 3/16"=1'-0"

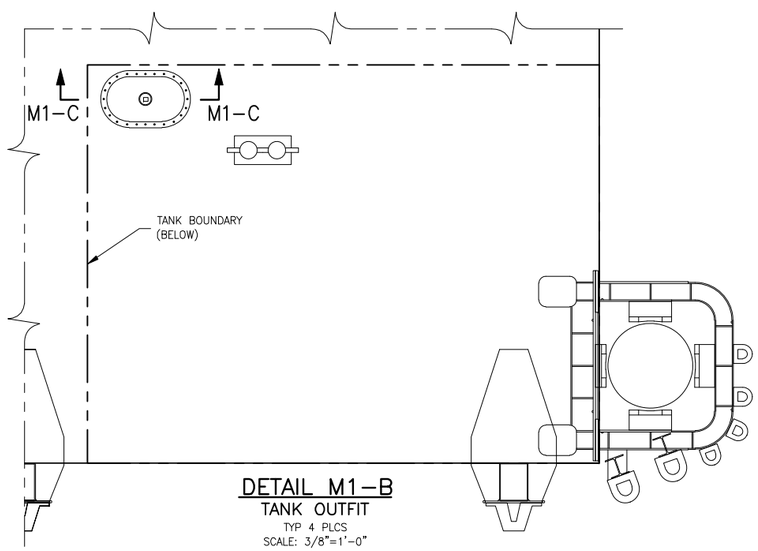

DETAIL M1-B
TANK OUTFIT
TYP 4 PLCS
SCALE: 3/8"=1'-0"

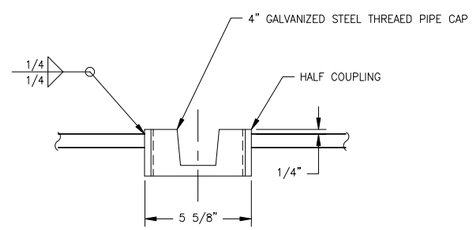

ELEVATION M1-C
ULLAGE PORT DETAIL
SCALE: 3"=1'-0"

SYMBOLS LIST	
- - - - -	EXISTING PIPE
———	NEW PIPE
	BALL VALVE
	CAMLOCK
	FLEXIBLE CONNECTION
	HOSE BIB

GENERAL NOTES

1. THE MECHANICAL INSTALLATION SHALL BE IN ACCORDANCE WITH THE 2013 CALIFORNIA PLUMBING CODE – TITLE 24 PART 5
2. THIS DRAWING IS DIAGRAMMATIC AND INDICATES GENERAL ARRANGEMENT OF SYSTEMS. DIMENSIONS SHALL BE VERIFIED AT FLOAT CONSTRUCTION.
3. PIPING SHALL BE ADEQUATELY SUPPORTED BY PIPE HANGERS IN ACCORDANCE WITH CALIFORNIA PLUMBING CODE SECTION 313. HANGERS SHALL BE ATTACHED TO PERMANENT STRUCTURE. DISSIMILAR METALS SHALL BE ISOLATED.
4. ROUTE ALL PIPING BELOW SUPERSTRUCTURE AND ABOVE DECK.
5. LOCATE SHORE CONNECTION CLEAR OF INTERFERENCE WITH GANGWAY LANDING PLATFORM.
6. VERTICALLY ORIENT SHORE CONNECTION TO REDUCE CONNECTION STRESS.

MATERIAL SCHEDULE

SERVICE	PIPING		VALVES		FITTINGS
	SIZE	MATERIAL	BODY	TRIM	
POTABLE WATER MAWP: 80 PSIG	2"	CARBON STEEL ASTM A53 OR A106, GR B SEAMLESS ANSI B36.10 SCH 40 GALVANIZED	BALL: BRONZE ASME SB61 OR SB62 MSS-SP-110 THREADED	BALL: CHROME PLATED BALL, PTFE SEATS	CARBON STEEL ASTM A234 GR WPB ANSI B16.11 THREADED SCH 40 GALVANIZED

REFERENCES

1. PASSENGER FLOAT TECHNICAL SPECIFICATION

AS-BUILT

AS-BUILT DRAWINGS DEVELOPED FROM INFORMATION PROVIDED BY CONTRACTOR. NO SITE INSPECTION WAS PERFOMED BY EBDG.

REVISIONS

NO.	DATE	DESCRIPTION
1	09/22/16	AS-BUILT

WATER EMERGENCY TRANSPORTATION AUTHORITY
WETA

kpff Consulting Engineers
101 Stewart Street, Suite 400
Seattle, Washington 98101 (206) 382-0600 Fax (206) 382-0500

CONSULTANT
Elliott Bay Design Group
Seattle New Orleans Ketchikan
5305 Shilshole Avenue NW, Suite 100 Seattle, WA 98107
main: 206.782.3082 – fax: 206.782.3449
Better to Build * Better to Operate

DESIGNED BY: LGB
DRAWN BY: MWR
CHECKED BY:

PROJECT
WATER EMERGENCY TRANSPORTATION AUTHORITY
PASSENGER FLOAT

SHEET
POTABLE WATER SYSTEM

DATE 12/01/2014
SHEET 26 OF 35
DRAWING NO. M1
JOB NO. 14058

SYMBOLS LIST

X / Y/Z	CIRCUIT BREAKER X – NUMBER OF POLES Y – CIRCUIT BREAKER FRAME SIZE Z – CIRCUIT BREAKER TRIP SETTING
	RECEPTACLE
	LIGHTS
	SHORE POWER RECEPTACLE
	TRANSFORMER
	JUNCTION BOX
	LIQUID–TIGHT FLEXIBLE NONMETALLIC CONDUIT
	CONTACT NORMALLY OPEN
	SWITCH NORMALLY OPEN
	MAIN DISCONNECT WITH FUSE
P	PHOTOCELL
M	MOTION SENSOR
L	LIGHTING CONTACTOR
$A	MANUAL OVERRIDE SWITCH SUBSCRIPT REFERS TO SWITCH DESIGNATION
	FUSE

GENERAL NOTES

1. THE ELECTRICAL INSTALLATION SHALL BE IN ACCORDANCE WITH NFPA 70: NATIONAL ELECTRICAL CODE (NEC), NFPA 302, AND THE CALIFORNIA ELECTRICAL CODE TITLE 24 PART 3.
2. DRAWINGS ARE DIAGRAMMATIC AND INDICATE GENERAL ARRANGEMENT OF SYSTEMS.
3. MAIN DISTRIBUTION IS A SINGLE PHASE 2 WIRE 120V 60HZ SYSTEM.
4. ALL PERMANENTLY INSTALLED ELECTRICAL EQUIPMENT SHALL HAVE METAL ENCLOSURES PROPERLY GROUNDED PER ARTICLES 250 AND 555 OF THE CALIFORNIA ELECTRICAL CODE.
5. ALL TRANSFORMER AND PANEL ENCLOSURES SHALL BE STAINLESS STEEL, NEMA 4X UNLESS OTHERWISE NOTED.
6. ISOLATE ALL DISSIMILAR METALS INCLUDING ENCLOSURES, FASTENERS, SUPERSTRUCTURE.
7. ALL ELECTRICAL CONNECTIONS SHALL BE LOCATED AT LEAST 12 INCHES ABOVE THE DECK OF THE FLOAT AND 30 INCHES ABOVE THE WATER SURFACE IN ACCORDANCE WITH ARTICLE 555 OF THE CALIFORNIA ELECTRICAL CODE.
8. UNLESS NOTED OTHERWISE, CONDUCTORS SHALL BE 600V RATED WITH THERMOPLASTIC TYPE INSULATION (THHN/THWN).
9. COMMUNICATIONS CABLE SHALL BE CAT 5 OR CAT 6 WITH RJ–45 CONNECTORS.
10. CONDUIT CONTAINING POWER WIRING SHALL BE INSTALLED AT LEAST 6 INCHES AWAY FROM CONDUIT CONTAINING COMMUNICATIONS CABLING. POWER AND COMMUNICATIONS CONDUIT SHALL CROSS EACH OTHER AT A RIGHT ANGLE.
11. ALL CONDUIT SHALL BE LOCATED AT LEAST 3 INCHES AWAY FROM POTABLE WATER PIPING.
12. CONDUCTORS SHALL BE ENCLOSED IN CONDUIT. POLYVINYL CHLORIDE (PVC) COATED RIGID METAL CONDUIT SHALL BE USED IN HIGH IMPACT AREAS. LIQUID–TIGHT FLEXIBLE NONMETALLIC CONDUIT SHALL BE USED AT THE CONNECTION BETWEEN GANGWAY AND FLOAT, MOVABLE WALKWAY SECTIONS, AND OTHER ARTICULATED CONNECTIONS. RIGID PVC SCHEDULE 80 CONDUIT SHALL BE USED IN ALL OTHER LOCATIONS.
13. ALL CONDUIT AND FITTINGS SHALL BE UL LISTED AND SHALL MEET THE APPLICABLE ARTICLES OF THE CALIFORNIA ELECTRICAL CODE.
14. FAULT CURRENT IS ESTIMATED TO BE 10 TIMES THE FULL LOAD CURRENT OF THE ISOLATION TRANSFORMER.

    TRANSFORMER: 10 x 42A = 420A
15. ALL RECEPTACLES SHALL BE GFCI TYPE, PER NEC 555.19(B)(1) OR THE CIRCUIT BREAKER SHALL BE PROVIDED WITH GFCI PROTECTION.
16. THE NAVIGATIONAL AID LIGHTS ARE SOLAR AND BATTERY POWERED WITH NO ELECTRICAL CONNECTIONS.
17. ALL COMPONENTS ON SHORE SIDE OF SHORE POWER CONNECTION ARE EXISTING OR PROVIDED BY LANDSIDE CONTRACTOR.
18. LIGHT FIXTURES, POLES, AND NAVIGATIONAL LIGHTS SHALL BE OUTFITTED WITH ANTI–BIRD STRIPS.
19. –NOT USED–
20. BOND SHORE POWER RECEPTACLE, DISCONNECT SWITCH, AND CONNECTING CONDUIT TO SHORESIDE GROUND CONDUCTOR. ISOLATE THESE COMPONENTS FROM THE FLOAT AND WALKWAY STRUCTURE.
21. COORDINATE SHORE CONNECTIONS AND CONDUIT RUNS WITH THE MECHANICAL CONTRACTOR TO ENSURE ADEQUATE SPACING.

REFERENCES

1. PASSENGER FLOAT TECHNICAL SPECIFICATION
2. CLIPPER FARE CARD READER SPECIFICATION 3

AS-BUILT

AS-BUILT DRAWINGS DEVELOPED FROM INFORMATION PROVIDED BY CONTRACTOR. NO SITE INSPECTION WAS PERFOMED BY EBDG.

REVISIONS

NO.	DATE	DESCRIPTION
1	3/31/15	REVISED P.E. STAMP
2	3/31/15	ADDED NOTE
3	3/31/15	ADDED REFERENCE
4	4/22/15	REMOVED #2, UPDATED CARD READER LOCATIONS
5	09/22/16	AS-BUILT

WATER EMERGENCY TRANSPORTATION AUTHORITY
WETA

kpff Consulting Engineers
101 Stewart Street, Suite 400
Seattle, Washington 98101 (206) 382–0600 Fax (206) 382–0500

CONSULTANT
Elliott Bay Design Group
Seattle New Orleans Ketchikan
5305 Shilshole Avenue NW, Suite 100 Seattle, WA 98107
main: 206.782.3082 – fax: 206.782.3449
Better to Build * Better to Operate

SEAL/SIGNATURE

SEAL/SIGNATURE

DESIGNED BY: EMT
DRAWN BY: MWR
CHECKED BY: TMH

PROJECT
WATER EMERGENCY TRANSPORTATION AUTHORITY
PASSENGER FLOAT

SHEET
ELECTRICAL TITLE SHEET

DATE 12/01/2014
SHEET 27 OF 35
DRAWING NO. E1
JOB NO. 14058

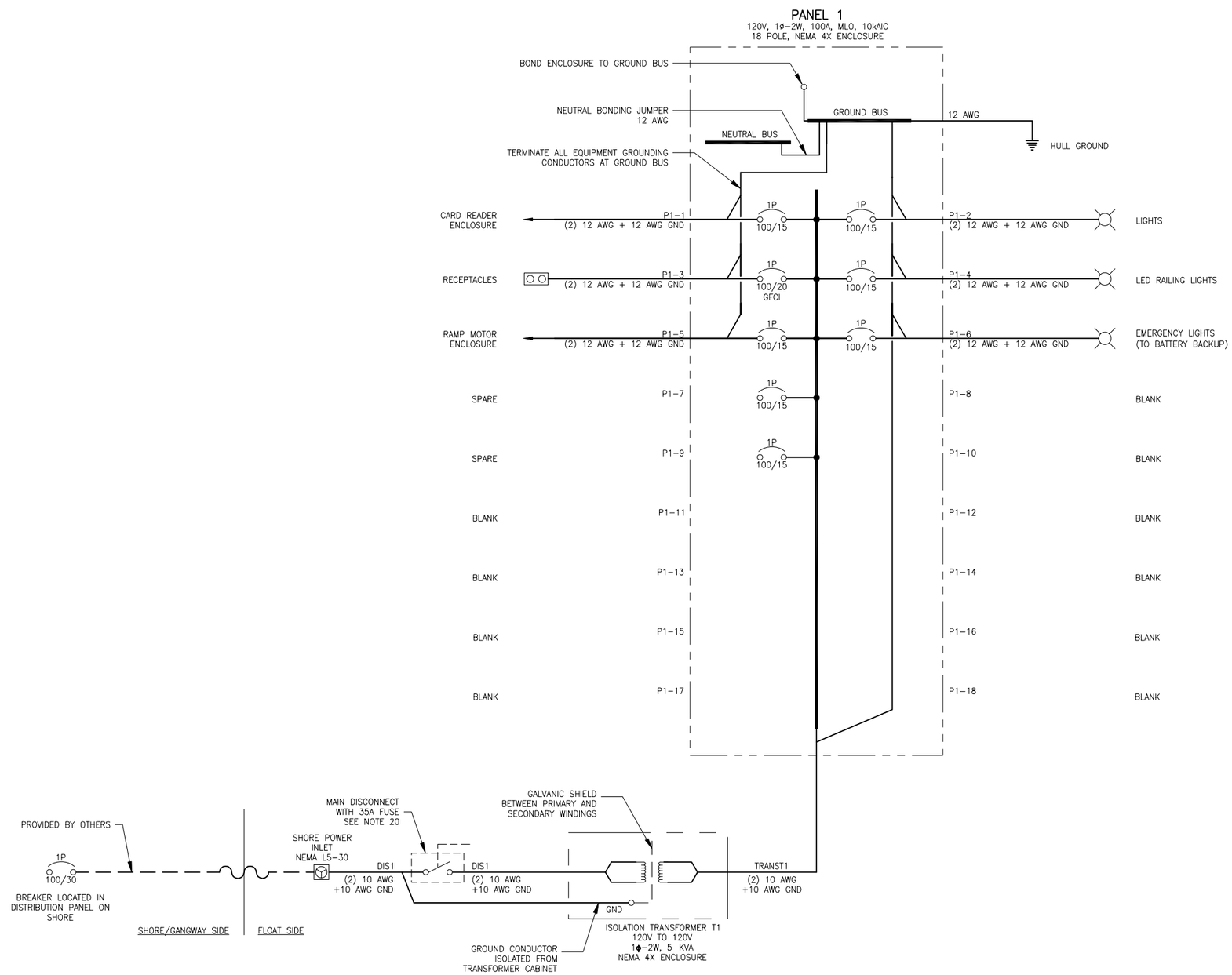

AS-BUILT

AS-BUILT DRAWINGS DEVELOPED FROM INFORMATION PROVIDED BY CONTRACTOR. NO SITE INSPECTION WAS PERFOMED BY EBDG.

REVISIONS

NO.	DATE	DESCRIPTION
1	09/22/16	AS-BUILT

WATER EMERGENCY TRANSPORTATION AUTHORITY
WETA

kpff Consulting Engineers
101 Stewart Street, Suite 400
Seattle, Washington 98101 (206)
382–0600 Fax (206) 382–0500

CONSULTANT
Elliott Bay Design Group
Seattle New Orleans Ketchikan
5305 Shilshole Avenue NW, Suite 100 Seattle, WA 98107
main: 206.782.3082 – fax: 206.782.3449
Better to Build * Better to Operate

SEAL/SIGNATURE

SEAL/SIGNATURE

DESIGNED BY: EMT
DRAWN BY: MWR
CHECKED BY: TMH

PROJECT
WATER EMERGENCY TRANSPORTATION AUTHORITY
PASSENGER FLOAT

SHEET
ELECTRICAL ONE-LINE DIAGRAM

DATE 12/01/2014
SHEET 28 OF 35
DRAWING NO. E2
JOB NO. 14058

LIGHT FIXTURE SCHEDULE

SYMBOL	TYPE	VENDER	MODEL	WATTS	VOLTS	QTY.	NOTES
	AREA LIGHT	LITHONIA	DSX1 LED	136	120	3	ARROW POINTS IN DIRECTION OF FIXTURE, MOUNTED ON LIGHT POLE, SEE DETAIL 3A
	JELLY JAR	AZZ R-A-L	AVP LED	26	120	1	–
	NAVIGATIONAL LIGHT	SEALITE	SL60	–	–	4	SOLAR/BATTERY POWERED, BLUE. MOUNTED ON FENDERS
	LED RAILING LIGHTS	OPTIMAL LED	SP07WW-60D	14.4	120	–	PROVIDED BY TOPPER. WATTS PER METER

MATERIAL SCHEDULE

SYMBOL	DESCRIPTION	VENDER	MODEL	QTY.	NOTES
	LIGHT POLE	LITHONIA	SSA 12 4C	3	SEE DETAILS 3A, 3B
	BACK BOX	CROUSE-HINDS	FSA1	3	BOX MOUNTED ON LIGHT POLE, SEE DETAIL 3A
	RECEPTACLE AND COVER	CROUSE-HINDS	WRLS 5 15	3	RECEPTACLE AND COVER MOUNTED ON BACK BOX ON LIGHT POLE, SEE DETAIL 3A
	MOTION SENSOR/PHOTOCELL	SENSORSWITCH	SBR 10	3	MOUNT ON LITHONIA LIGHT FIXTURES, SEE DETAIL 3A

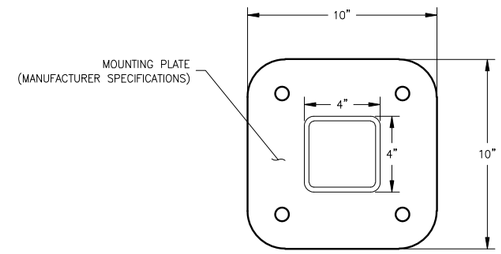

DETAIL 3B
PLAN VIEW
SCALE: 3"=1'-0"

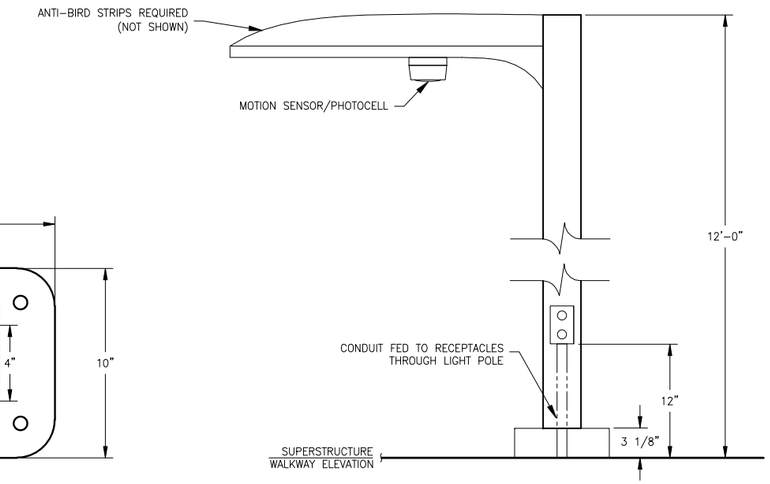

DETAIL 3A
PROFILE VIEW
SCALE: 1-1/2"=1'-0"

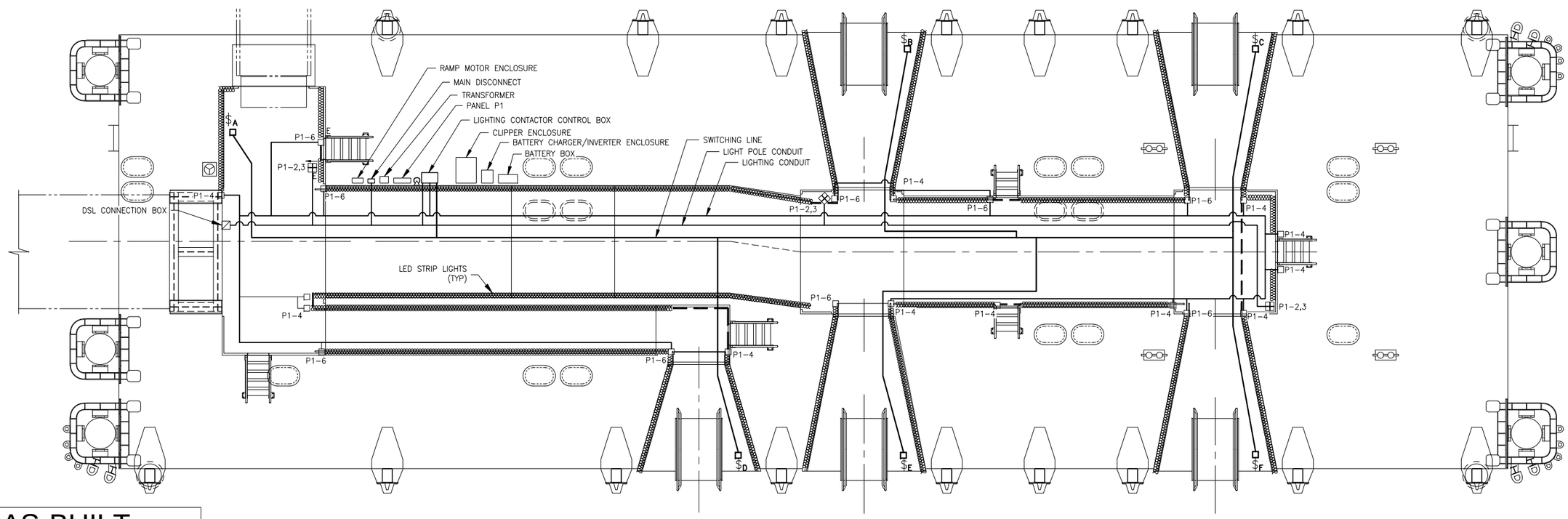

LIGHTING PLAN
SCALE: 3/16"=1'-0"

AS-BUILT

AS-BUILT DRAWINGS DEVELOPED FROM INFORMATION PROVIDED BY CONTRACTOR. NO SITE INSPECTION WAS PERFOMED BY EBDG.

REVISIONS

NO.	DATE	DESCRIPTION
1	09/22/16	AS-BUILT

WATER EMERGENCY TRANSPORTATION AUTHORITY
WETA

kpff Consulting Engineers
101 Stewart Street, Suite 400
Seattle, Washington 98101 (206) 382-0600 Fax (206) 382-0500

CONSULTANT
Elliott Bay Design Group
Seattle New Orleans Ketchikan
5305 Shilshole Avenue NW, Suite 100 Seattle, WA 98107
main: 206.782.3062 – fax: 206.782.3449
Better to Build * Better to Operate

SEAL/SIGNATURE

SEAL/SIGNATURE

DESIGNED BY: EMT
DRAWN BY: JJ
CHECKED BY: TMH

PROJECT
WATER EMERGENCY TRANSPORTATION AUTHORITY
PASSENGER FLOAT

SHEET
LIGHTING PLAN

DATE 12/01/2014
SHEET 29 OF 35
DRAWING NO. E3
JOB NO. 14058

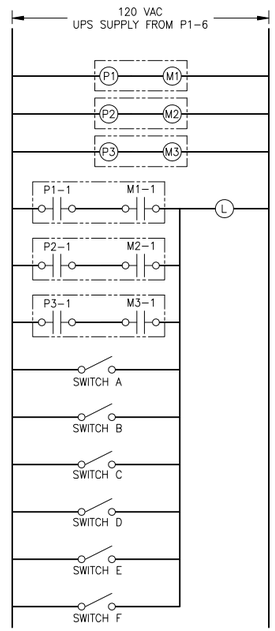

LIGHTING CONTROL POWER

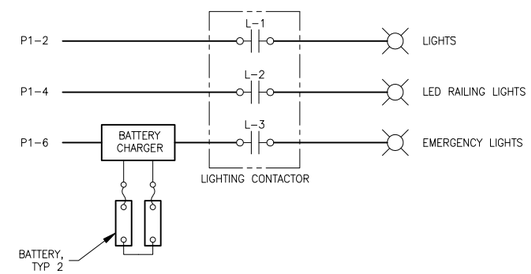

LIGHTING CONTROL

AS-BUILT

AS-BUILT DRAWINGS DEVELOPED FROM INFORMATION PROVIDED BY CONTRACTOR. NO SITE INSPECTION WAS PERFOMED BY EBDG.

REVISIONS

NO.	DATE	DESCRIPTION
1	09/22/16	AS-BUILT

WATER EMERGENCY TRANSPORTATION AUTHORITY
WETA

kpff Consulting Engineers
101 Stewart Street, Suite 400
Seattle, Washington 98101 (206) 382-0600 Fax (206) 382-0500

CONSULTANT
Elliott Bay Design Group
Seattle New Orleans Ketchikan
5305 Shilshole Avenue NW, Suite 100 Seattle, WA 98107
main: 206.782.3082 - fax: 206.782.3449
Better to Build * Better to Operate

SEAL/SIGNATURE

SEAL/SIGNATURE

DESIGNED BY: EMT
DRAWN BY: JJ
CHECKED BY: TMH

PROJECT
WATER EMERGENCY TRANSPORTATION AUTHORITY
PASSENGER FLOAT

SHEET
LIGHTING CONTROL

DATE 12/01/2014
SHEET 30 OF 35
DRAWING NO. **E4**
JOB NO. 14058

CONDUIT SCHEDULE			
WIRE SIZE	CONDUIT TYPE	NO. OF WIRES	TRADE SIZE
10AWG	RIGID PVC SCH 80	1–4	1/2
		5–7	3/4
		8–13	1
	LFNC	1–5	1/2
		6–10	3/4
		11–16	1
12AWG	RIGID PVC SCH 80	1–6	1/2
		7–12	3/4
		13–20	1
	LFNC	1–9	1/2
		10–16	3/4
		17–20	1
CAT5	RIGID PVC SCH 80	1–2	1/2
		3–5	3/4
	LFNC	1–3	1/2
		4–5	3/4

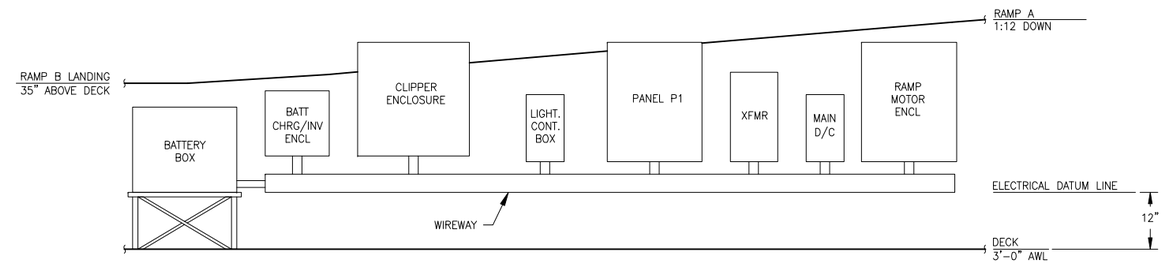

CONDUIT DIAGRAM
PROFILE VIEW
SCALE: 3/4"=1'-0"

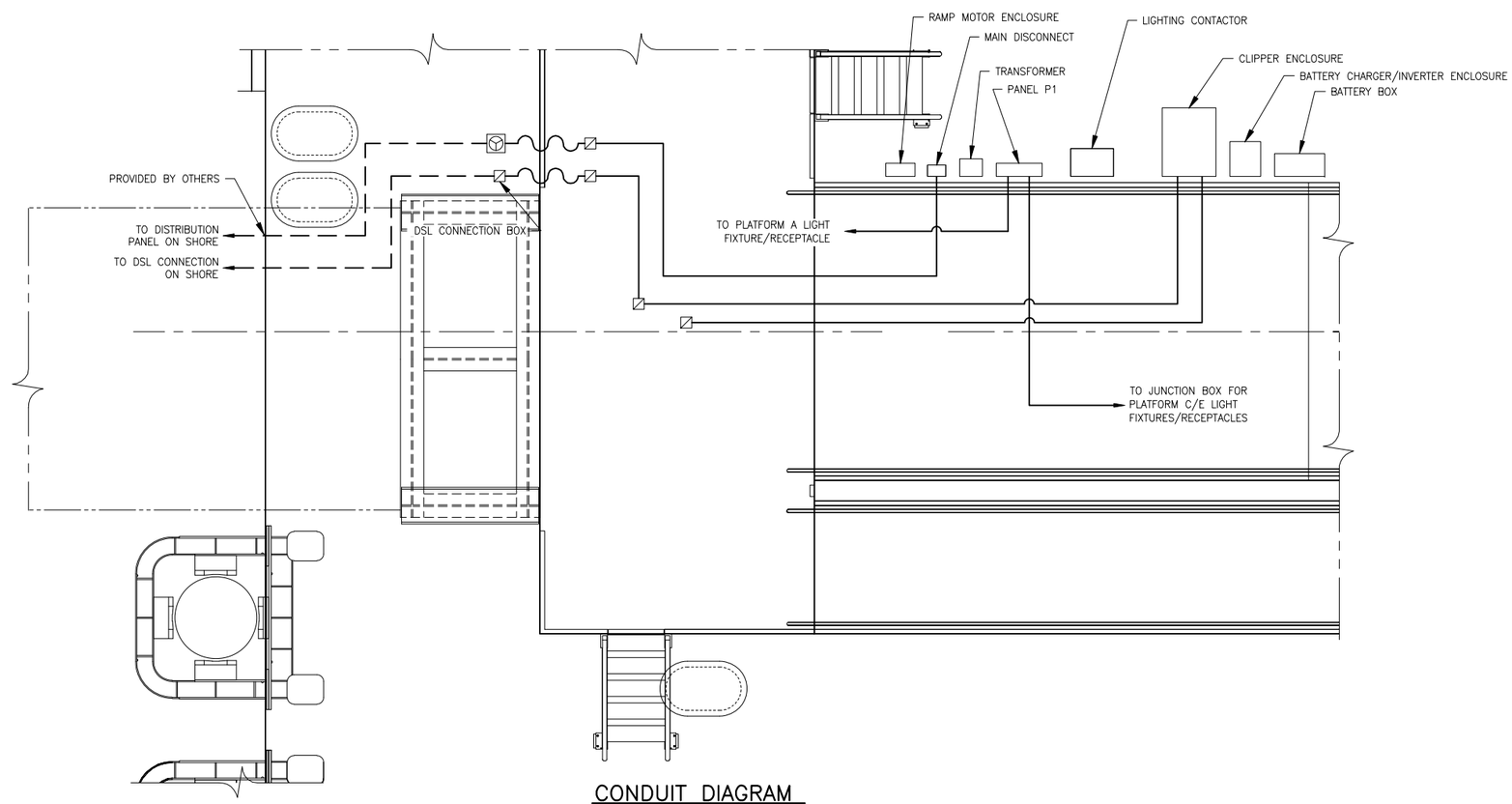

CONDUIT DIAGRAM
PLAN VIEW
SCALE: 3/8"=1'-0"

AS-BUILT

AS-BUILT DRAWINGS DEVELOPED FROM INFORMATION PROVIDED BY CONTRACTOR. NO SITE INSPECTION WAS PERFOMED BY EBDG.

REVISIONS		
NO.	DATE	DESCRIPTION
1	09/22/16	AS-BUILT

WATER EMERGENCY TRANSPORTATION AUTHORITY
WETA

kpff Consulting Engineers
101 Stewart Street, Suite 400
Seattle, Washington 98101 (206) 382-0600 Fax (206) 382-0500

CONSULTANT
Elliott Bay Design Group
Seattle New Orleans Ketchikan
5305 Shilshole Avenue NW, Suite 100 Seattle, WA 98107
main: 206.782.3082 – fax: 206.782.3449
Better to Build * Better to Operate

SEAL/SIGNATURE
SEAL/SIGNATURE

DESIGNED BY: EMT
DRAWN BY: JJ
CHECKED BY: TMH

PROJECT
WATER EMERGENCY TRANSPORTATION AUTHORITY
PASSENGER FLOAT

SHEET
CONDUIT ARRANGEMENT

DATE 12/01/2014
SHEET 31 OF 35
DRAWING NO. **E5**
JOB NO. 14058

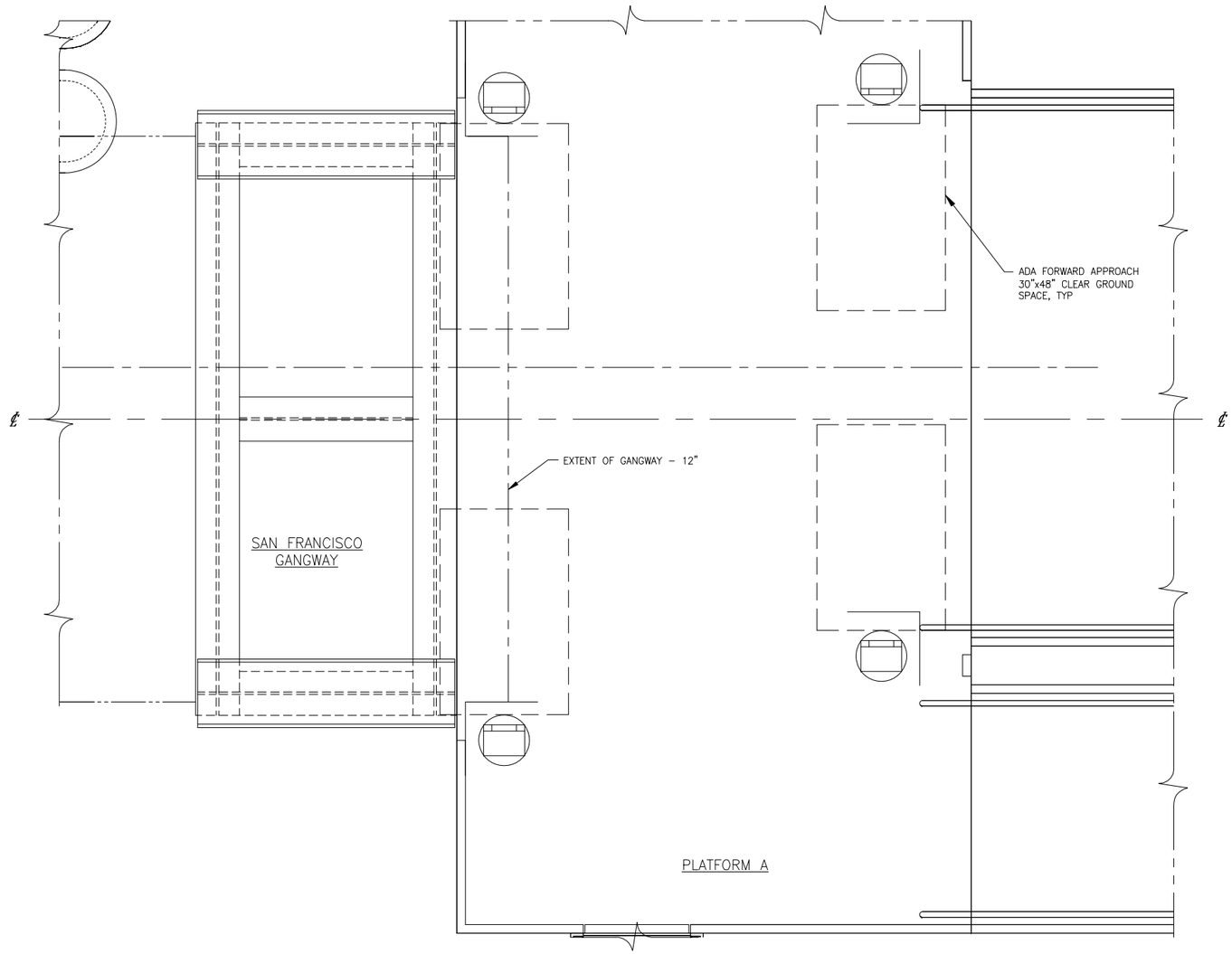

CARD READER PLACEMENT DETAIL
SCALE: 3/4"=1'-0"
SEE NOTE 19

AS-BUILT

AS-BUILT DRAWINGS DEVELOPED FROM INFORMATION PROVIDED BY CONTRACTOR. NO SITE INSPECTION WAS PERFOMED BY EBDG.

REVISIONS

NO.	DATE	DESCRIPTION
2	3/31/15	ADDED NOTE
4	4/22/15	REMOVED #2, UPDATED CARD READER LOCATIONS
5	09/22/16	AS-BUILT

WATER EMERGENCY TRANSPORTATION AUTHORITY
WETA

kpff Consulting Engineers
101 Stewart Street, Suite 400
Seattle, Washington 98101 (206) 382-0600 Fax (206) 382-0500

CONSULTANT
Elliott Bay Design Group
Seattle New Orleans Ketchikan
5305 Shilshole Avenue NW, Suite 100 Seattle, WA 98107
main: 206.782.3082 – fax: 206.782.3449
Better to Build * Better to Operate

SEAL/SIGNATURE

SEAL/SIGNATURE

DESIGNED BY: EMT
DRAWN BY: MWR
CHECKED BY: TMH

PROJECT
WATER EMERGENCY TRANSPORTATION AUTHORITY
PASSENGER FLOAT

SHEET
CARD READER ARRANGEMENTS

DATE 12/01/2014
SHEET 32 OF 35
DRAWING NO. E6
JOB NO. 14058

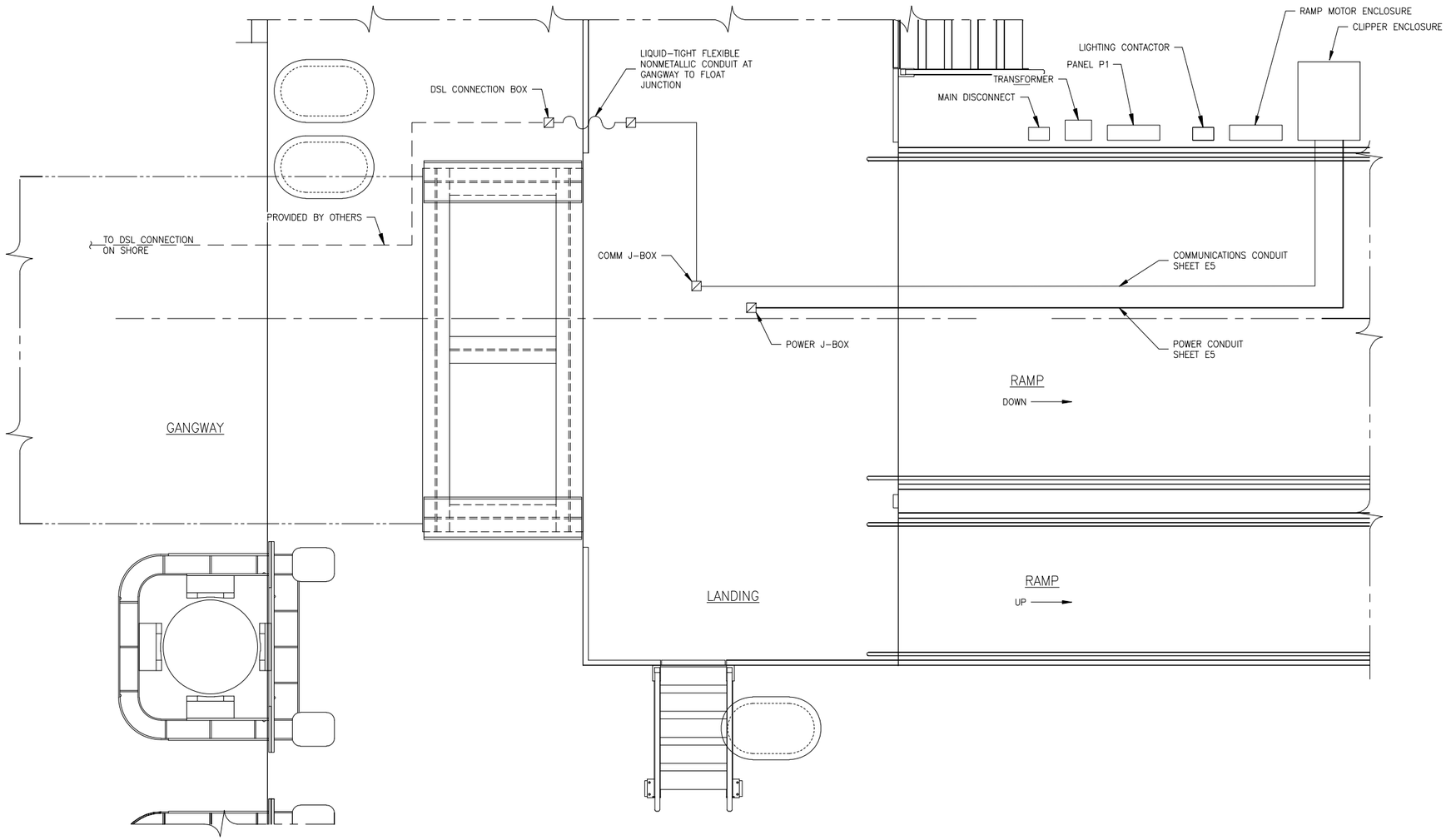

CARD READER WIRING DIAGRAM
SCALE: 1/2"=1'–0"

AS-BUILT

AS-BUILT DRAWINGS DEVELOPED FROM INFORMATION PROVIDED BY CONTRACTOR. NO SITE INSPECTION WAS PERFOMED BY EBDG.

REVISIONS

NO.	DATE	DESCRIPTION
4	4/22/15	UPDATED CARD READER LOCATIONS
5	09/22/16	AS-BUILT

WATER EMERGENCY TRANSPORTATION AUTHORITY
WETA

kpff Consulting Engineers
101 Stewart Street, Suite 400
Seattle, Washington 98101 (206) 382–0600 Fax (206) 382–0500

CONSULTANT
Elliott Bay Design Group
Seattle New Orleans Ketchikan
5305 Shilshole Avenue NW, Suite 100 Seattle, WA 98107
main: 206.782.3082 – fax: 206.782.3449
Better to Build * Better to Operate

SEAL/SIGNATURE

SEAL/SIGNATURE

DESIGNED BY: EMT
DRAWN BY: MWR
CHECKED BY: TMH

PROJECT
WATER EMERGENCY TRANSPORTATION AUTHORITY
PASSENGER FLOAT

SHEET
CARD READER ELECTRICAL PLAN

DATE 12/01/2014
SHEET 33 OF 35
DRAWING NO. E7
JOB NO. 14058

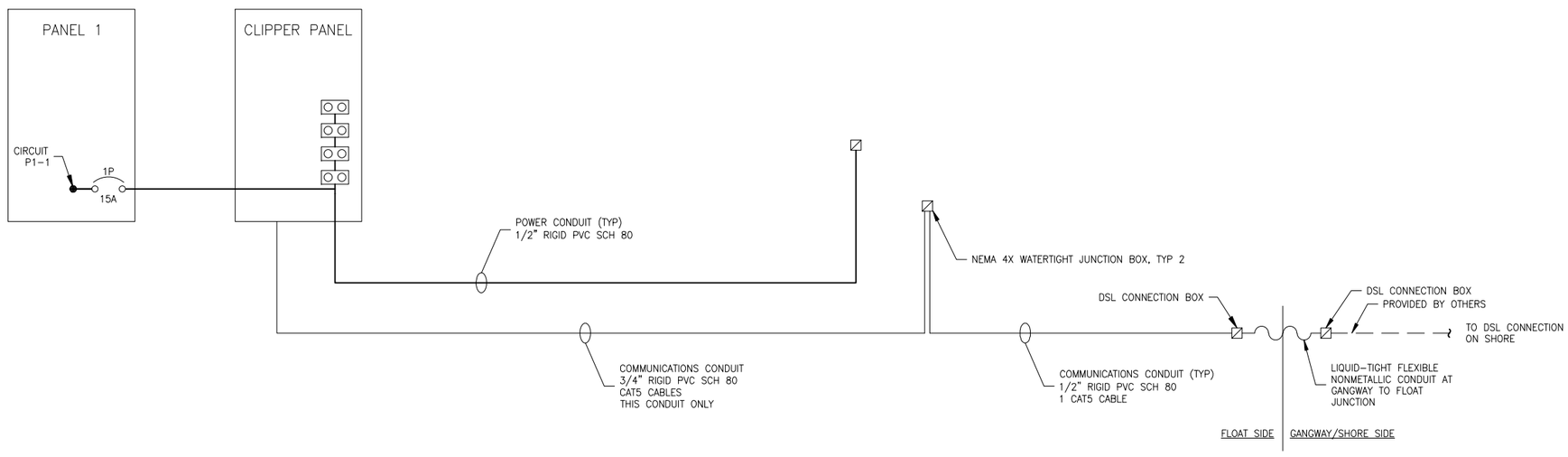

AS-BUILT

AS-BUILT DRAWINGS DEVELOPED FROM INFORMATION PROVIDED BY CONTRACTOR. NO SITE INSPECTION WAS PERFOMED BY EBDG.

REVISIONS

NO.	DATE	DESCRIPTION
1	09/22/16	AS-BUILT

WATER EMERGENCY TRANSPORTATION AUTHORITY
WETA

kpff Consulting Engineers
101 Stewart Street, Suite 400
Seattle, Washington 98101 (206) 382-0600 Fax (206) 382-0500

CONSULTANT
Elliott Bay Design Group
Seattle New Orleans Ketchikan
5305 Shilshole Avenue NW, Suite 100 Seattle, WA 98107
main: 206.782.3082 - fax: 206.782.3449
Better to Build * Better to Operate

SEAL/SIGNATURE

SEAL/SIGNATURE

DESIGNED BY: EMT
DRAWN BY: MWR
CHECKED BY: TMH

PROJECT
WATER EMERGENCY TRANSPORTATION AUTHORITY
PASSENGER FLOAT

SHEET
CARD READER WIRING DIAGRAM

DATE 12/01/2014
SHEET 34 OF 35
DRAWING NO. E8
JOB NO. 14058

SHEET DELETED

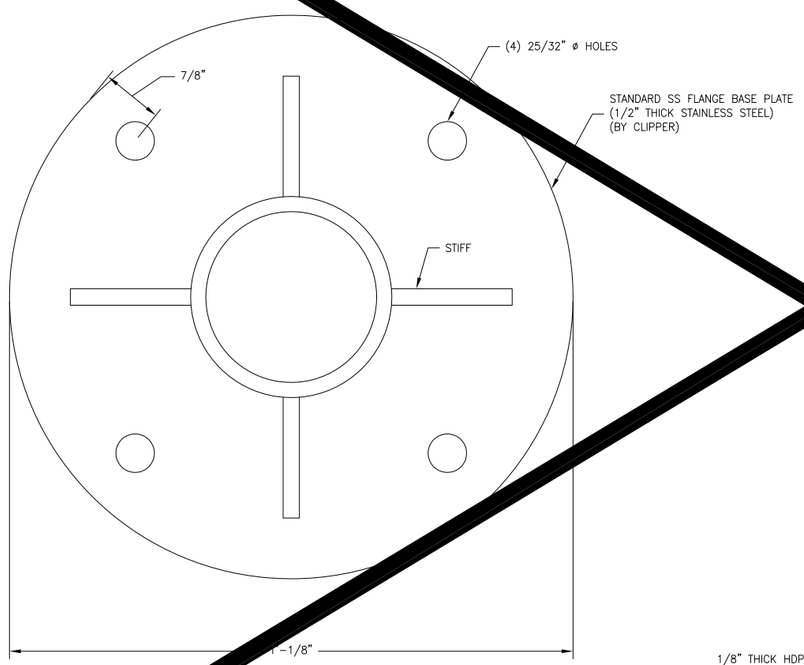

DETAIL 6A
BASE DETAIL
TYP 4

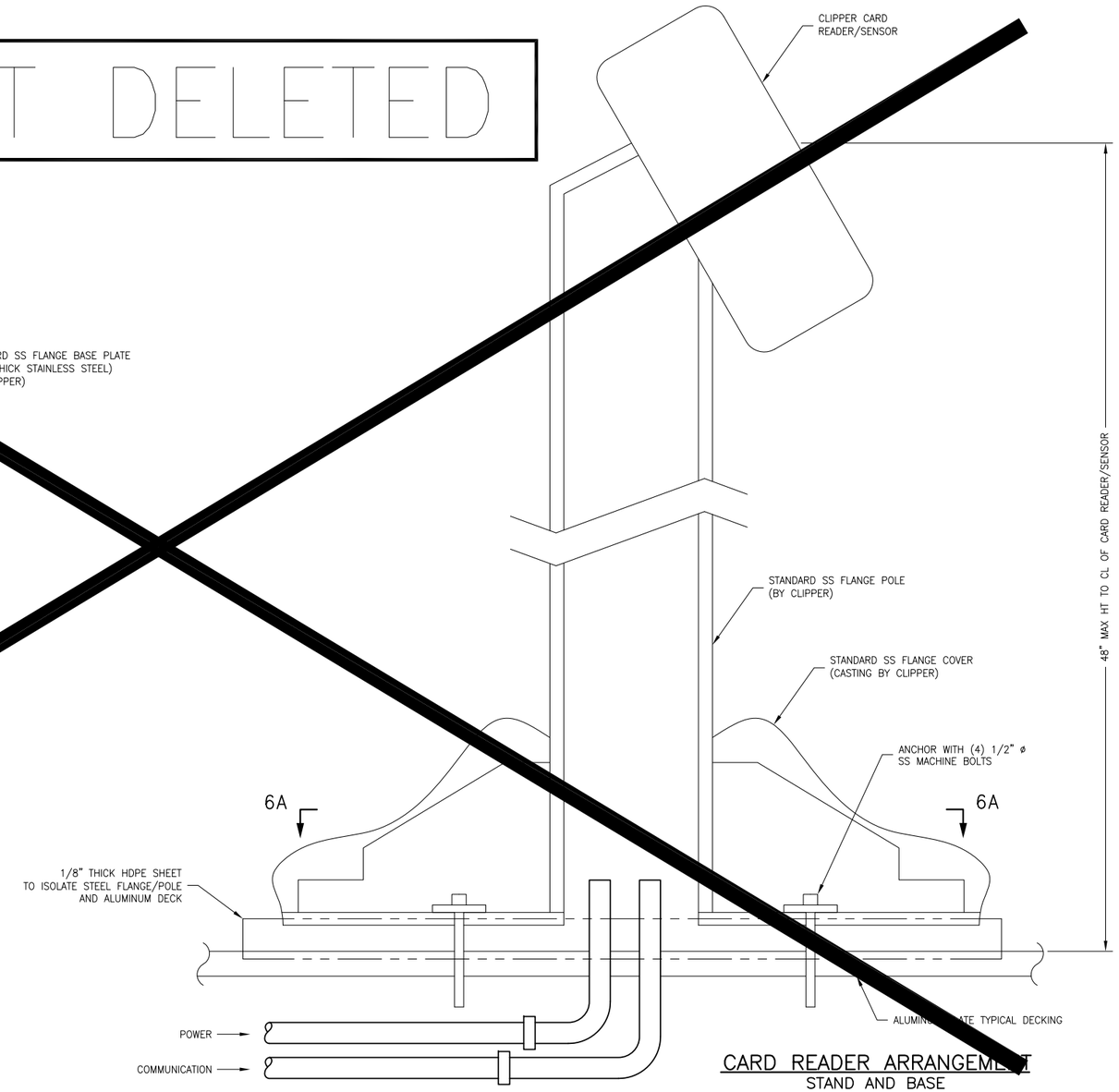

CARD READER ARRANGEMENT
STAND AND BASE
TYP 4

AS-BUILT

AS-BUILT DRAWINGS DEVELOPED FROM INFORMATION PROVIDED BY CONTRACTOR. NO SITE INSPECTION WAS PERFOMED BY EBDG.

REVISIONS		
NO.	DATE	DESCRIPTION
1	10/14/16	SHEET DELETED

WATER EMERGENCY TRANSPORTATION AUTHORITY
WETA

kpff Consulting Engineers
101 Stewart Street, Suite 400
Seattle, Washington 98101 (206) 382-0600
Fax (206) 382-0500

CONSULTANT
Elliott Bay Design Group
Seattle New Orleans Ketchikan
5305 Shilshole Avenue NW, Suite 100 Seattle, WA 98107
main: 206.782.3082 - fax: 206.782.3449
Better to Build * Better to Operate

SEAL/SIGNATURE

SEAL/SIGNATURE

DESIGNED BY: EMT
DRAWN BY: MWR
CHECKED BY: TMH

PROJECT
WATER EMERGENCY TRANSPORTATION AUTHORITY
PASSENGER FLOAT

SHEET
CARD READER BASE DETAIL

DATE 12/01/2014
SHEET 35 OF 35
DRAWING NO. E9
JOB NO. 14058

10/14/2016 1:23:32 PM