ALL DRAWINGS REQUIRE FIELD/SITE VERIFICATION - INFORMATIONAL USE ONLY

North Bay Ferry Demonstration Project

Vallejo Ferry Terminal Dock

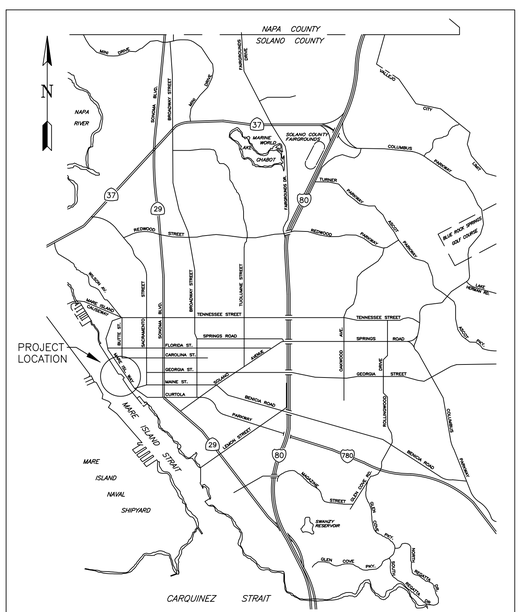

VICINITY MAP

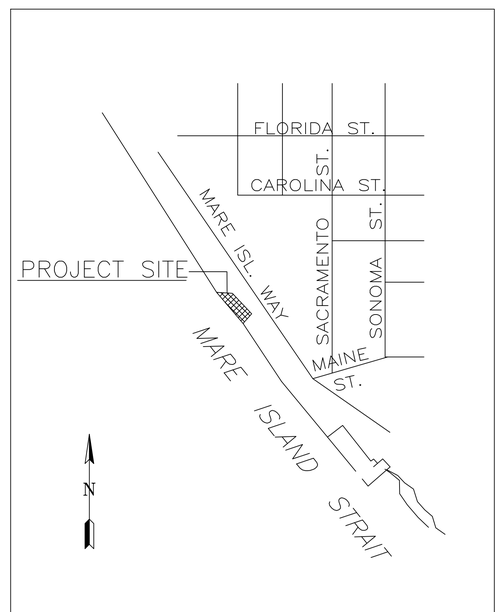

PROJECT LOCATION MAP

SHEET INDEX

T1 VICINITY MAP, LOCATION MAP, AND SHEET INDEX

D1 DREDGING PLAN

C1 SITE PLAN
C2 FLOAT PLAN AND ELEVATION
C3 FLOAT STRUCTURE PLAN
C4 FLOAT STRUCTURE DETAILS
C5 FLOAT STRUCTURE DETAILS
C6 FLOAT STRUCTURE DETAILS
C7 FLOAT STRUCTURE DETAILS
C8 FENDER DETAILS
C9 FENDER DETAILS
C10 FENDER AND CLEAT DETAILS
C11 ANCHORAGE PLAN AND ELEVATION
C12 UTILITY PLAN AND ANCHORAGE DETAILS
C13 TRANSFER SPANS
C14 TRANSFER SPAN DETAILS
C15 TRANSFER SPAN DETAILS
C16 LIFT PLATFORM
C17 CANOPY/RAILING ELEVATIONS AND DETAILS

S1 STRUCTURAL FRAMING PLAN AND NOTES
S2 GANGWAY PLAN AND ELEVATIONS
S3 GANGWAY DETAILS
S4 GANGWAY SUPPORT DETAILS
S5 GANGWAY SUPPORT DETAILS
S6 WALKWAY DETAILS
S7 DETAILS
S8 GANGWAY SUPPORT DETAILS

E1 ELECTRICAL PLAN
E2 ELECTRICAL DETAILS
E3 ELECTRICAL DETAILS

REGISTERED PROFESSIONAL ENGINEER
GARY E. GILL
36482
Exp.06/30/00
CIVIL
STATE OF CALIFORNIA

ART ANDERSON ASSOCIATES
148 FIRST STREET BREMERTON, WA 98337 (360) 479-6800 FAX 479-6810
65 MARION STREET SEATTLE, WA 98104 (206) 622-6221

kpff Consulting Engineers
1201 Third Avenue, Suite 900 Seattle, WA 98101
(206) 622-5822 Fax (206) 622-8130

VALLEJO FERRY TERMINAL DOCK
CITY OF VALLEJO, CA.

VICINITY MAP, LOCATION MAP, AND SHEET INDEX

DESIGNED	ELR
DRAWN	ELR
CHECKED	JRL/GEG
DATE	8-19-97
JOB NO	FVL03
SHT NO	T1

ALL DRAWINGS REQUIRE FIELD/SITE VERIFICATION - INFORMATIONAL USE ONLY

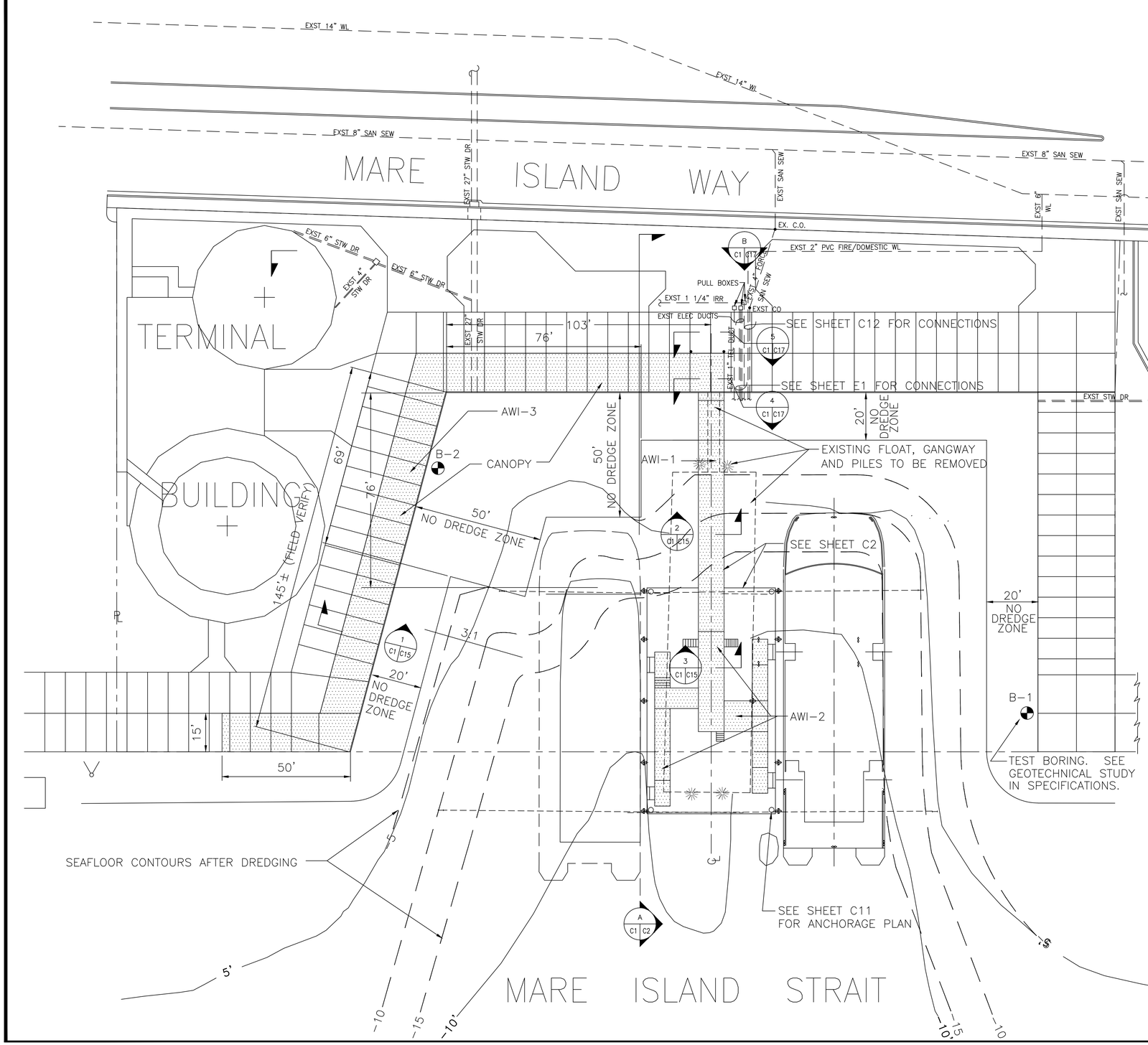

ABBREVIATIONS

EXST	EXISTING
ELEC	ELECTRICAL
STW	STORM WATER
DR	DRAIN
SAN SEW	SANITARY SEWER
IRR	IRRIGATION
WL	WATERLINE

TIDE ELEVATION

EXTREME HIGH WATER	+9.4
TIDE TABLE HIGH WATER	+7.0
MEAN HIGHER HIGH WATER	+6.2
MEAN SEA LEVEL	+2.0
MEAN LOWER LOW WATER	0.0
TIDE TABLE LOW WATER	−1.8
EXTREME LOW WATER	−2.7

GANGWAY ADA ACCESSIBLE BETWEEN +7.0 AND −1.8 TIDE ELEVATION.

NOTES:

Bathymetric data is from a survey conducted by Sea Surveyor, Inc. on 12 August 1996 and represents the seafloor conditions present on that date.

The hydrographic survey was conducted using Class 1 hydrographic survey methods and accuracies outlined in the Corps of Engineers' HYDROGRAPHIC SURVEYING MANUAL (EM 1110-2-1003, October 1994). The survey was conducted using a 26' survey boat, a laser range-azimuth navigation system, and an INNERSPACE model 448 survey-grade fathometer.

Horizontal positions are referenced to the (NAD 1927) California State Plane Coordinate System, Zone 3.

Soundings are in feet below Mean Lower Low Water (MLLW), as referenced to bench mark "Grotto" (El. 9.10' MLLW).

Contours are generated every 5 feet.

NOTE:

Existing utility locations on this drawing are approximate. Information for locations shown was gathered from drawings obtained from the City of Vallejo, Vallejo, California.

SITE PLAN

0 5' 10' 15' 20' 30' 40' 60'

SCALE: 1" = 20'

IF THIS SHEET IS LESS THAN 24X36 REDUCE SHOWN SCALE ACCORDINGLY.

REGISTERED PROFESSIONAL ENGINEER
GARY E. GILL
36482
Exp.06/30/00
CIVIL
STATE OF CALIFORNIA

ART ANDERSON ASSOCIATES
148 FIRST STREET BREMERTON, WA 98337
(360) 479-5600 FAX 479-5605
65 MARION STREET SEATTLE, WA 98104
(206) 622-6221

kpff Consulting Engineers
1201 Third Avenue, Suite 900 Seattle, WA 98101
(206) 622-5822 Fax (206) 622-8130

VALLEJO FERRY TERMINAL DOCK
CITY OF VALLEJO, CA.

SITE PLAN

DESIGNED	JRL
DRAWN	ELR
CHECKED	JRL/GEG
DATE	8-19-97
JOB NO	FVL03
SHT NO	C1

ALL DRAWINGS REQUIRE FIELD/SITE VERIFICATION - INFORMATIONAL USE ONLY

NOTE:
EXTEND CANOPY COLUMNS (AS PART OF BASE BID WORK) TO 8' ABOVE THE PLATFORM DECK WHERE REQUIRED TO SUPPORT LIGHT FIXTURE. SEE ELECTRICAL PLAN, SHEET E1, AND SHEET S1 PLUS SECTION A/S1 S6.

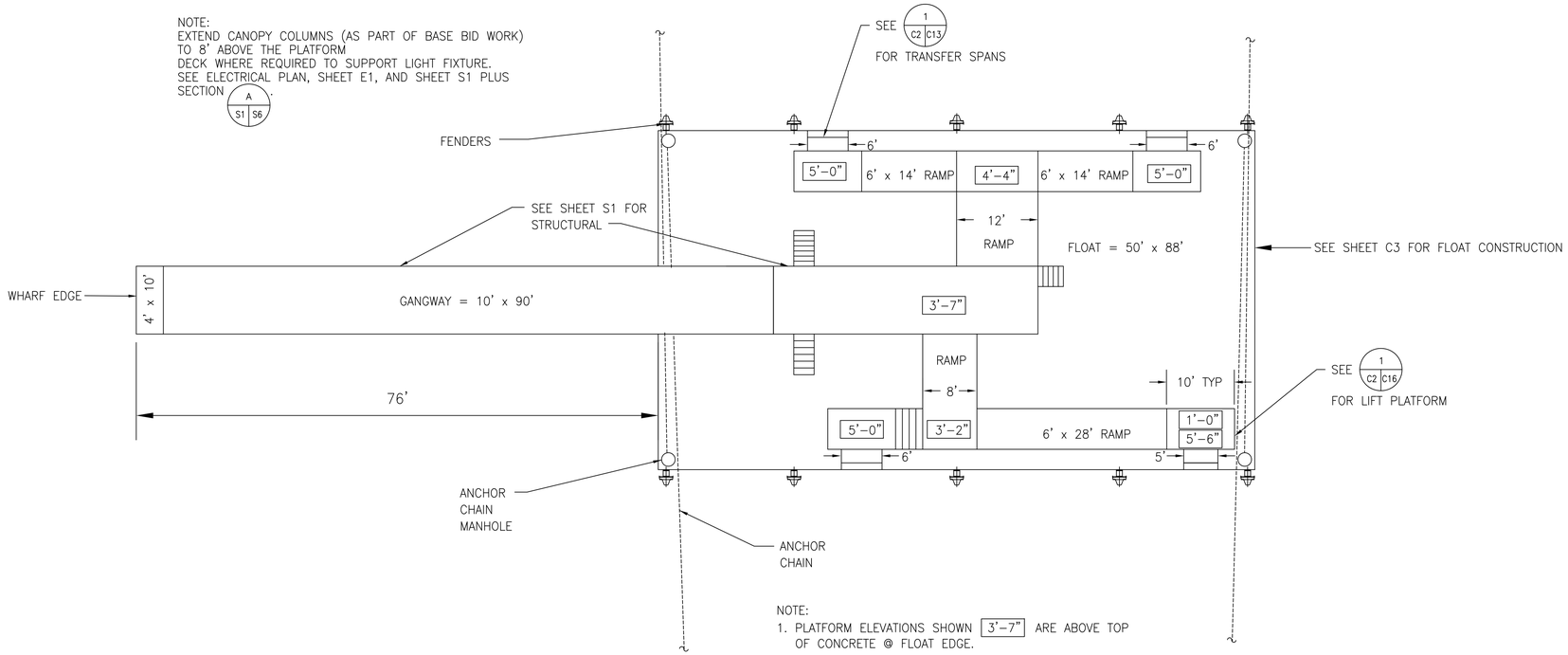

NOTE:
1. PLATFORM ELEVATIONS SHOWN 3'-7" ARE ABOVE TOP OF CONCRETE @ FLOAT EDGE.
2. GANGWAY & PLATFORM DIMENSIONS SHOWN ARE NOMINAL CLEAR WIDTHS. SEE STRUCT DWGS FOR DETAILED INFORMATION.

FLOAT PLATFORM PLAN

SCALE: 1" = 10'

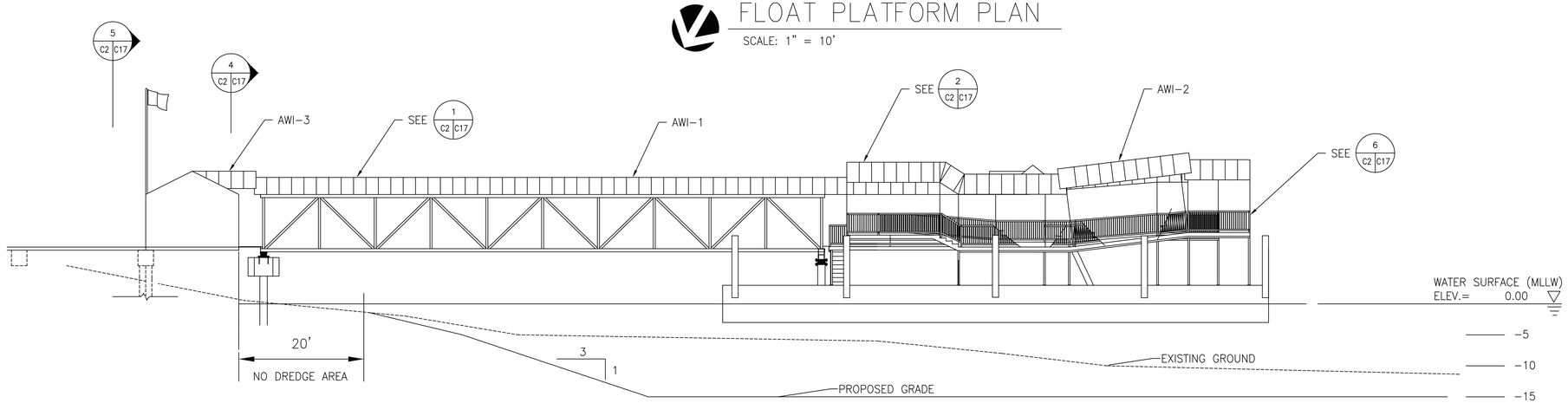

FLOAT PLATFORM ELEVATION

A/C1 C2

SCALE: 1" = 10'

0 5' 10' 15' 20' 30'
SCALE: 1" = 10'

IF THIS SHEET IS LESS THAN 24X36 REDUCE SHOWN SCALE ACCORDINGLY.

REGISTERED PROFESSIONAL ENGINEER
GARY E. GILL
36482
Exp.06/30/00
CIVIL
STATE OF CALIFORNIA

ART ANDERSON ASSOCIATES
148 FIRST STREET BREMERTON, WA 98337
(360) 479-5600 FAX 479-5605
65 MARION STREET SEATTLE, WA 98104
(206) 622-6221

kpff Consulting Engineers
1201 Third Avenue, Suite 900 Seattle, WA 98101
(206) 622-5822 Fax (206) 622-8130

VALLEJO FERRY TERMINAL DOCK
CITY OF VALLEJO, CA.

FLOAT PLAN AND ELEVATION

DESIGNED	JRL
DRAWN	ELR
CHECKED	JRL/GEG
DATE	8-19-97
JOB NO	FVL03
SHT NO	C2

ALL DRAWINGS REQUIRE FIELD/SITE VERIFICATION - INFORMATIONAL USE ONLY

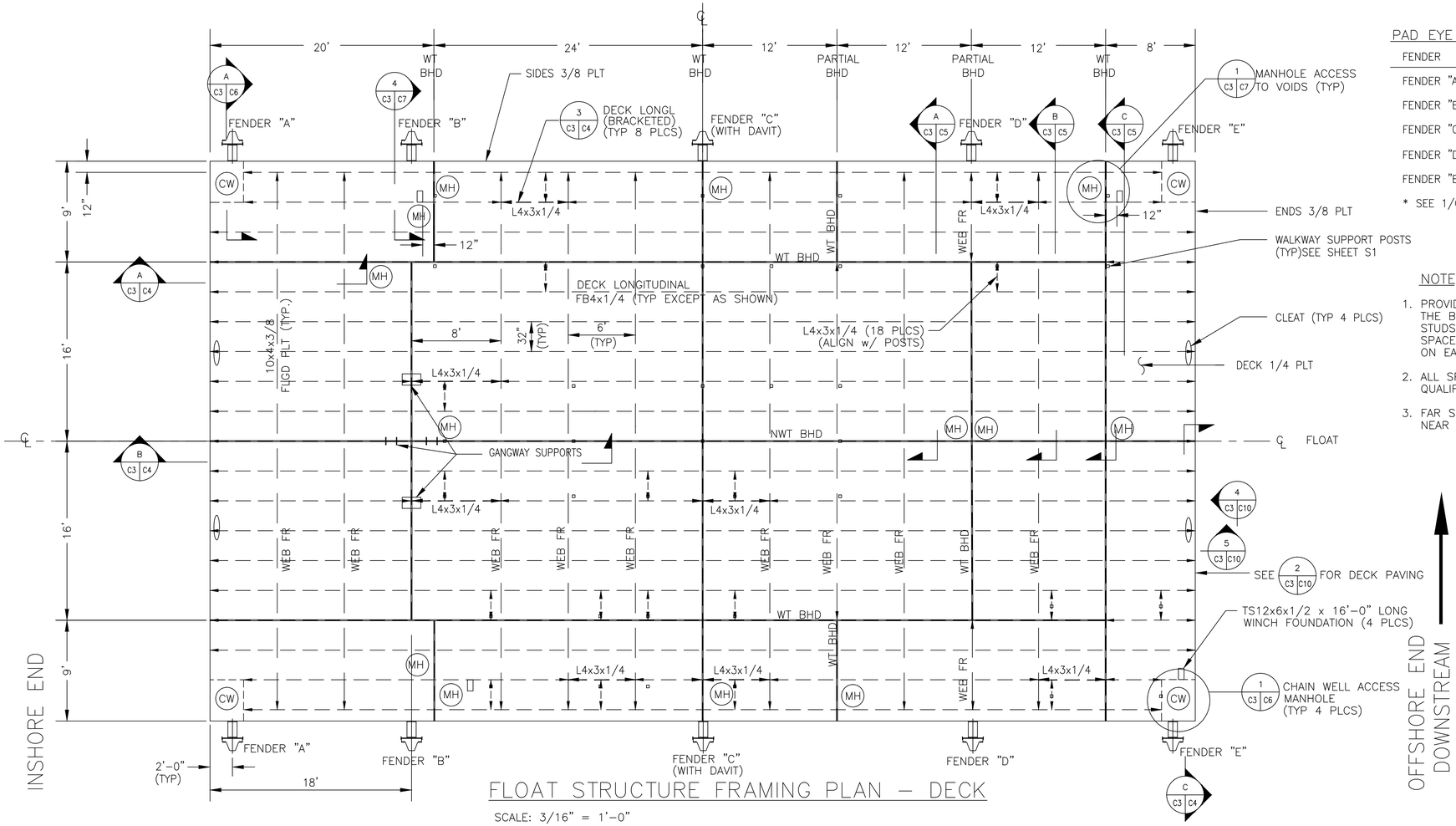

FLOAT STRUCTURE FRAMING PLAN – DECK

SCALE: 3/16" = 1'-0"

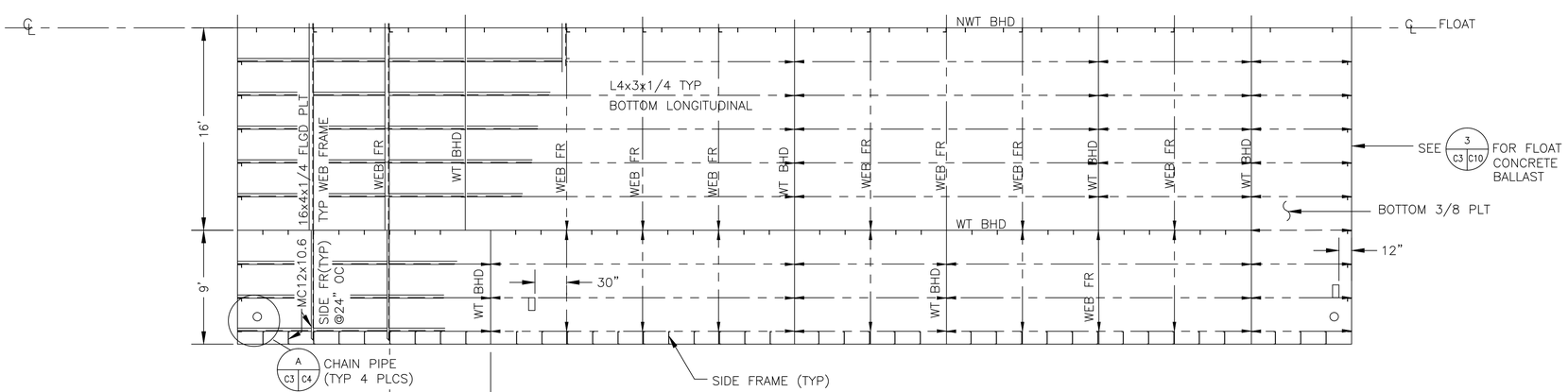

FLOAT STRUCTURE FRAMING PLAN – BOTTOM

SCALE: 3/16" = 1'-0"

PAD EYE LOCATIONS* & MOORING LINE LENGTH

FENDER	PADEYE LOCATION	LENGTH
FENDER "A"	OFFSHORE SIDE	22 FEET
FENDER "B"	OFFSHORE SIDE	26 FEET
FENDER "C"	INSHORE SIDE	16 FEET
FENDER "D"	NONE	
FENDER "E"	BOTH SIDES	22 FEET

* SEE 1/C9

NOTE

1. PROVIDE 22lb. ZINC ANODES MOUNTED 12" ABOVE THE BOTTOM OF THE FLOAT WITH (2) THREADED STUDS, NUTS AND WASHERS. PLACE (5) EQUALLY SPACED ON EACH SIDE AND (2) EQUALLY SPACED ON EACH END.
2. ALL SPLICED JOINTS IN PLATING SHALL BE PRE-QUALIFIED COMPLETE PENETRATION BUTT WELDS.
3. FAR SIDE WELD SIZES NOT NOTED SHALL MATCH NEAR SIDE WELD SIZES.

ABBREVIATIONS

WEB FRAME	WEB FR
PLATE	PLT
FLANGED	FLGD
BULKHEAD	BHD
WATERTIGHT	WT
NON-WATERTIGHT	NWT
CENTERLINE	℄
TYPICAL	TYP
JUNIOR CHANNEL	MC
LONGITUDINAL	LONGL
PLACES	PLCS
MANHOLE (TO VOID)	MH
MANHOLE TO CHAIN WELL	CW

IF THIS SHEET IS LESS THAN 24X36 REDUCE SHOWN SCALE ACCORDINGLY.

REGISTERED PROFESSIONAL ENGINEER
GARY E. GILL
36482
Exp.06/30/00
CIVIL
STATE OF CALIFORNIA

ART ANDERSON ASSOCIATES
148 FIRST STREET BREMERTON, WA 98337 (360) 479-3550 FAX 479-3605
65 MARION STREET SEATTLE, WA 98104 (206) 622-6221

kpff Consulting Engineers
1201 Third Avenue, Suite 900 Seattle, WA 98101
(206) 622-5822 Fax (206) 622-8130

VALLEJO FERRY TERMINAL DOCK
CITY OF VALLEJO, CA.

FLOAT STRUCTURE PLAN

DESIGNED	AW
DRAWN	ELR
CHECKED	JRL/GEG
DATE	8-19-97
JOB NO	FVL03
SHT NO	C3

ALL DRAWINGS REQUIRE FIELD/SITE VERIFICATION - INFORMATIONAL USE ONLY

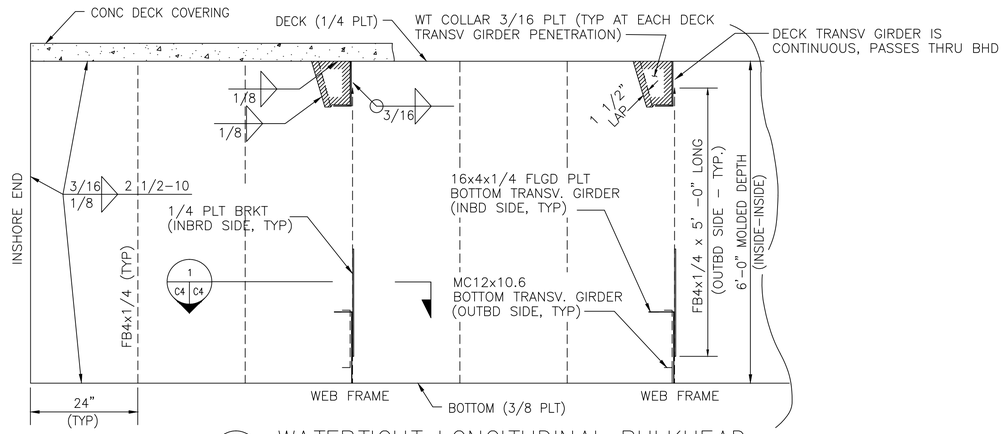

A C3 C4 WATERTIGHT LONGITUDINAL BULKHEAD

SCALE: 3/4" = 1'-0"

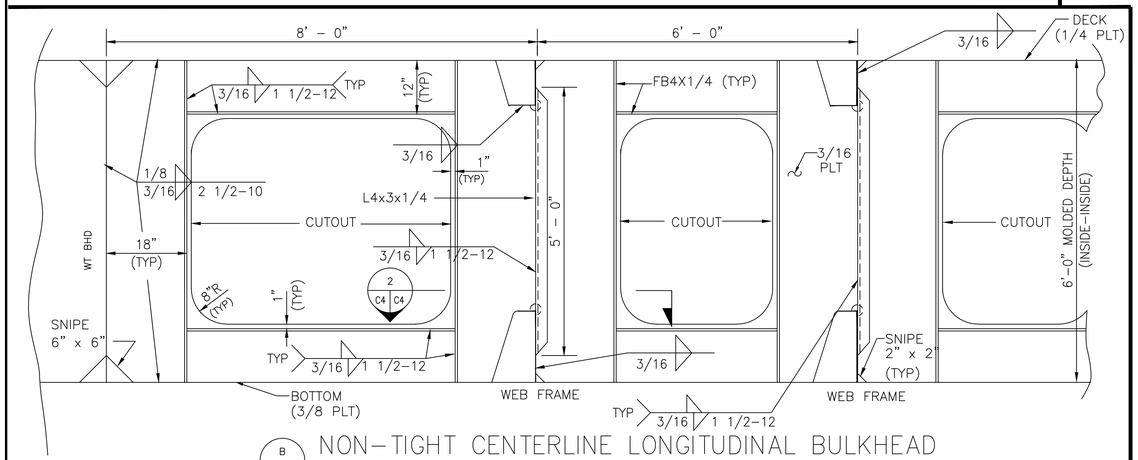

B C3 C4 NON-TIGHT CENTERLINE LONGITUDINAL BULKHEAD

SCALE: 3/4" = 1'-0"

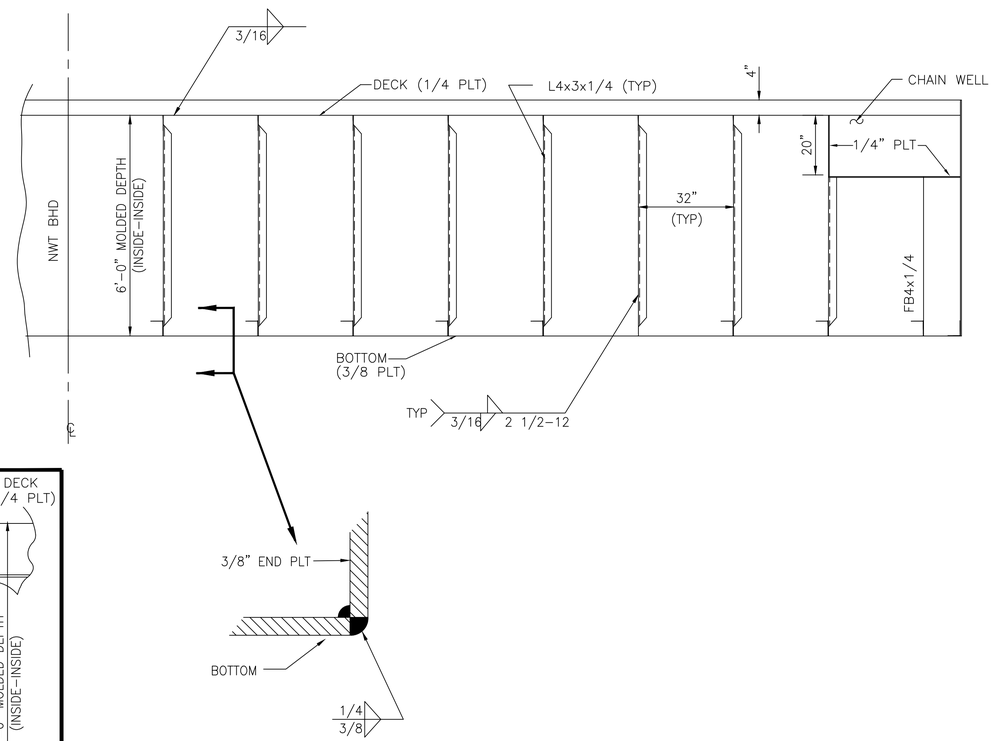

C C3 C4 END FRAMING (OFFSHORE END – VIEW FROM INSIDE)

SCALE: 1/2" = 1'-0" (FENDER NOT SHOWN)

NOTE: INSHORE END SIM.

IF THIS SHEET IS LESS THAN 24X36 REDUCE SHOWN SCALE ACCORDINGLY.

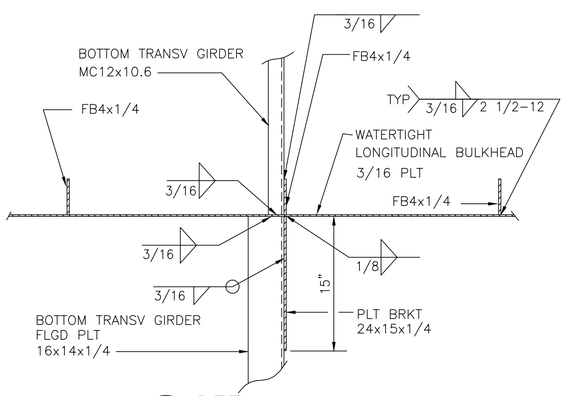

1 C4 C4 DETAIL

SCALE: 1 1/2" = 1' - 0"

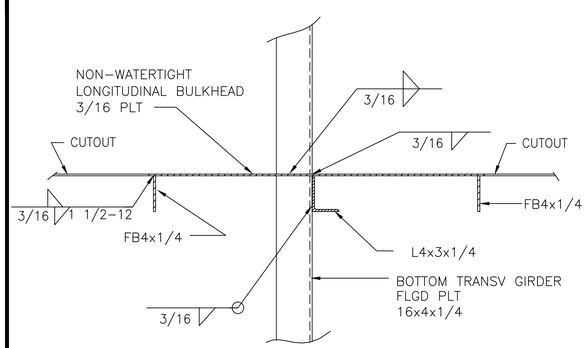

2 C4 C4 DETAIL

SCALE: 1 1/2" = 1' - 0"

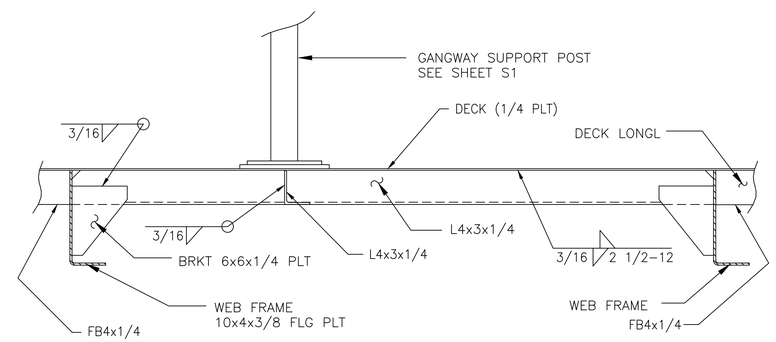

3 C3 C4 DETAIL (LOOKING INBOARD) DECK LONGITUDINAL (BRACKETED)

SCALE: 1 1/2" = 1'-0"

REGISTERED PROFESSIONAL ENGINEER
GARY E. GILL
36482
Exp.06/30/00
CIVIL
STATE OF CALIFORNIA

ART ANDERSON ASSOCIATES
148 FIRST STREET, BREMERTON, WA 98337 (360) 479-6800 FAX 479-6805
65 MARION STREET, SEATTLE, WA 98104 (206) 622-6221

kpff Consulting Engineers
1201 Third Avenue, Suite 900 Seattle, WA 98101
(206) 622-5822 Fax (206) 622-8130

VALLEJO FERRY TERMINAL DOCK
CITY OF VALLEJO, CA.

FLOAT STRUCTURE DETAILS

DESIGNED	AW
DRAWN	ELR
CHECKED	JRL/GEG
DATE	8-19-97
JOB NO	FVL03
SHT NO	C4

ALL DRAWINGS REQUIRE FIELD/SITE VERIFICATION - INFORMATIONAL USE ONLY

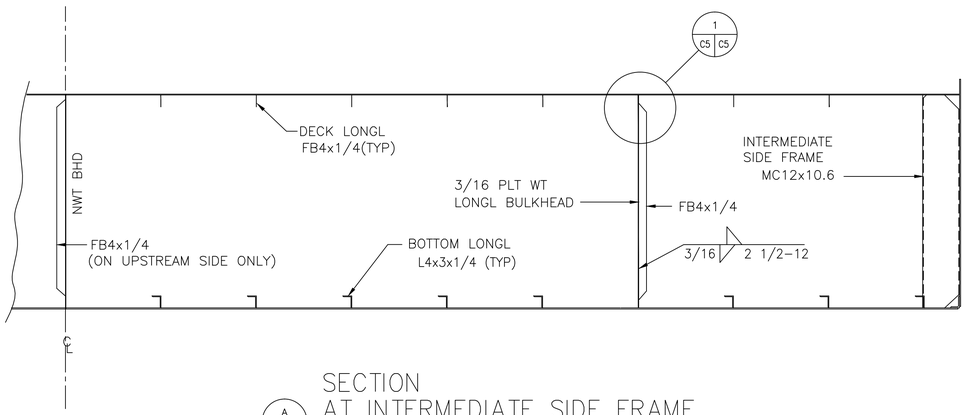

SECTION
AT INTERMEDIATE SIDE FRAME
A C3 C5
SCALE: 1/2" = 1'-0"

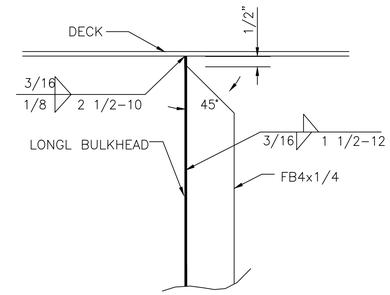

DETAIL
STIFFENER ON LONGITUDINAL
BHD – TOP END (TYPICAL)
1 C5 C5
SCALE: 3" = 1'-0"

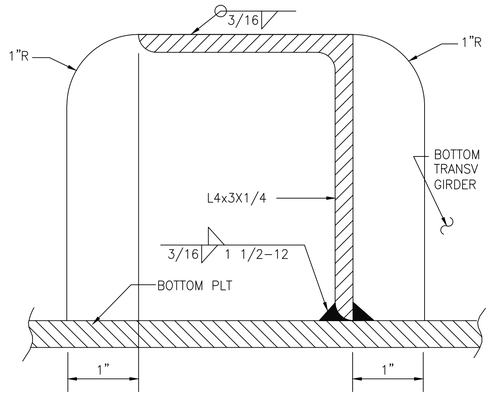

DETAIL – NOTCH
FOR BOTTOM LONGITUDINAL
2 C5 C5
SCALE: 12" = 1'-0"

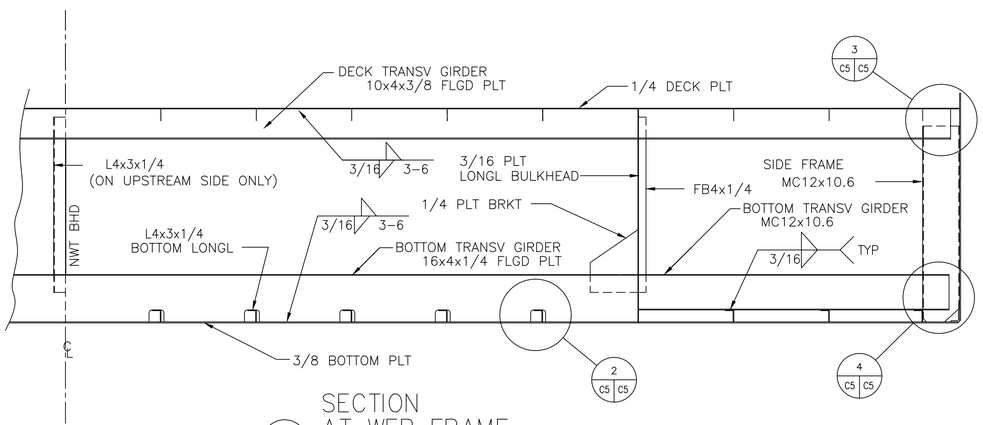

SECTION
AT WEB FRAME
B C3 C5
SCALE: 1/2" = 1'-0"

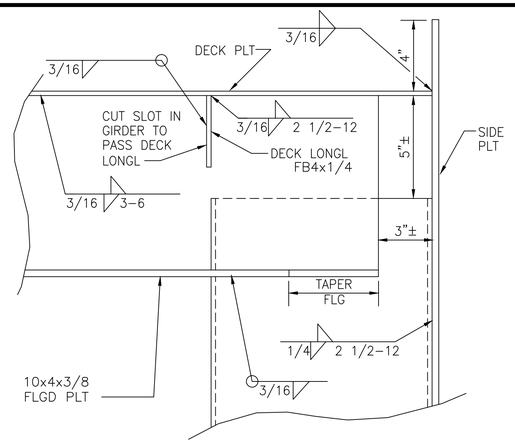

DETAIL
WEB FRAME – UPPER CORNER
3 C5 C5
SCALE: 3" = 1'-0"

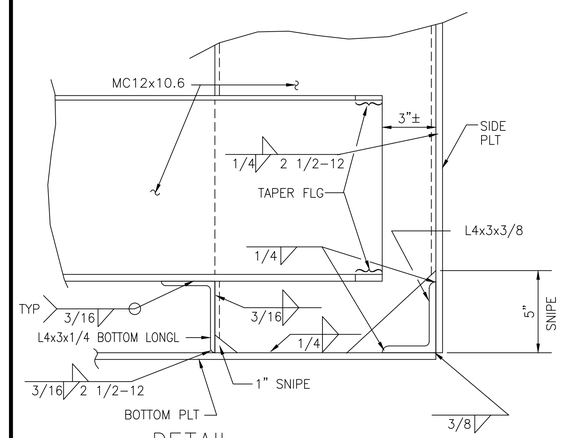

DETAIL
WEB FRAME –LOWER CORNER
4 C5 C5
SCALE: 3" = 1'-0"

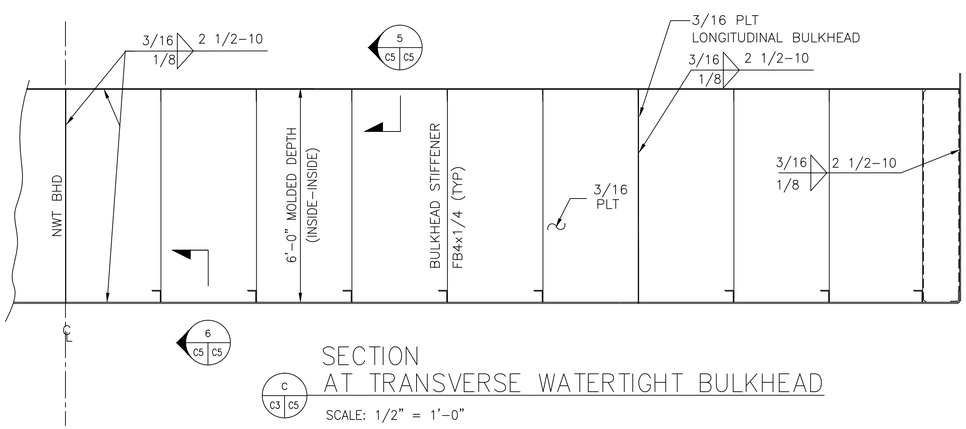

SECTION
AT TRANSVERSE WATERTIGHT BULKHEAD
C C3 C5
SCALE: 1/2" = 1'-0"

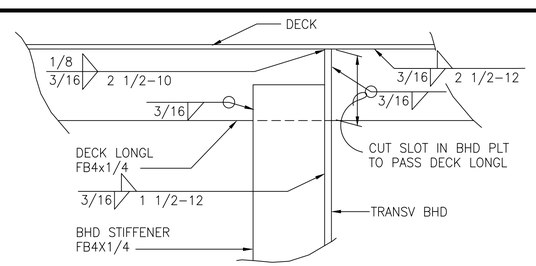

DETAIL
STIFFENER ON TRANSV
BHD – TOP END CONN
5 C5 C5
SCALE: 3" = 1'-0"

IF THIS SHEET IS LESS THAN 24X36
REDUCE SHOWN SCALE ACCORDINGLY.

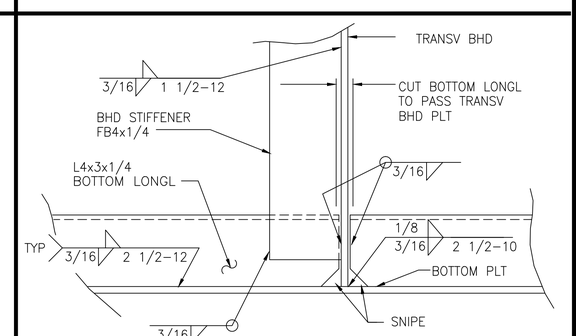

DETAIL
STIFFENER ON TRANSVERSE
BHD – BOTTOM END CONNECTION
6 C5 C5
SCALE: 3" = 1'-0"

REGISTERED PROFESSIONAL ENGINEER
GARY E. GILL
36482
Exp.06/30/00
CIVIL
STATE OF CALIFORNIA

ART ANDERSON
A S S O C I A T E S
148 FIRST STREET BREMERTON, WA 98337 (360) 479-6800 FAX 479-6805
65 MARION STREET SEATTLE, WA 98104 (206) 622-6221

kpff Consulting Engineers
1201 Third Avenue, Suite 900 Seattle, WA 98101
(206) 622-5822 Fax (206) 622-8130

VALLEJO FERRY TERMINAL DOCK
CITY OF VALLEJO, CA.

FLOAT STRUCTURE DETAILS

DESIGNED	AW
DRAWN	ELR
CHECKED	JRL/GEG
DATE	8-19-97
JOB NO	FVL03
SHT NO	C5

ALL DRAWINGS REQUIRE FIELD/SITE VERIFICATION - INFORMATIONAL USE ONLY

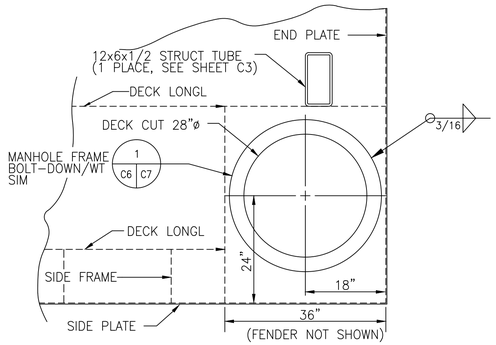

DETAIL
CHAIN WELL ACCESS MANHOLE
1 C3 C6
SCALE: 3/4" = 1'-0"

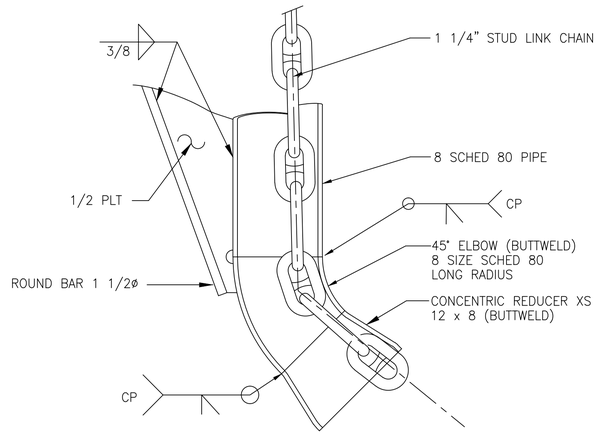

DETAIL
CHAIN PIPE
2 C6 C6
SCALE: 1 1/2" = 1'-0"

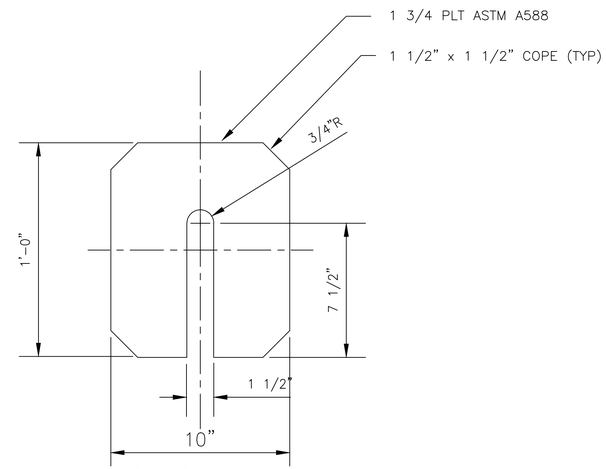

DETAIL
KEEPER PLATE
3 C6 C6
SCALE: 3" = 1'-0"

NOTE
PROVIDE 2 KEEPER PLATES
FOR EACH CHAIN WELL

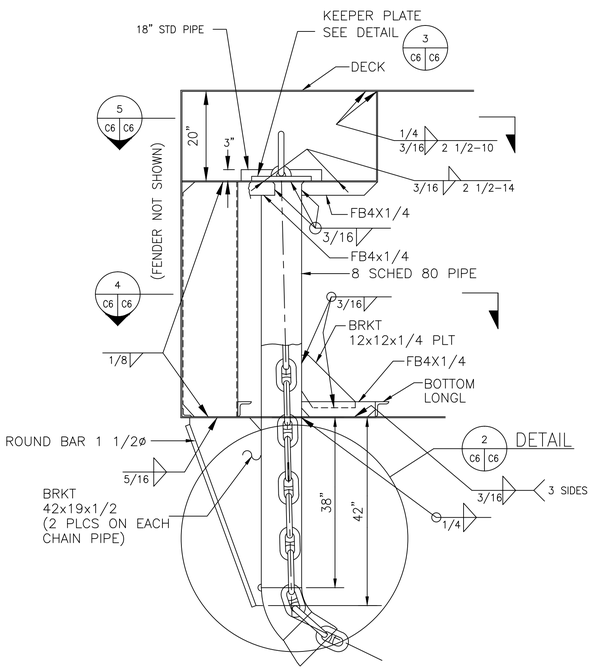

SECTION
CHAIN PIPE AND CHAIN WELL
A C3 C6
SCALE: 3/4" = 1'-0"

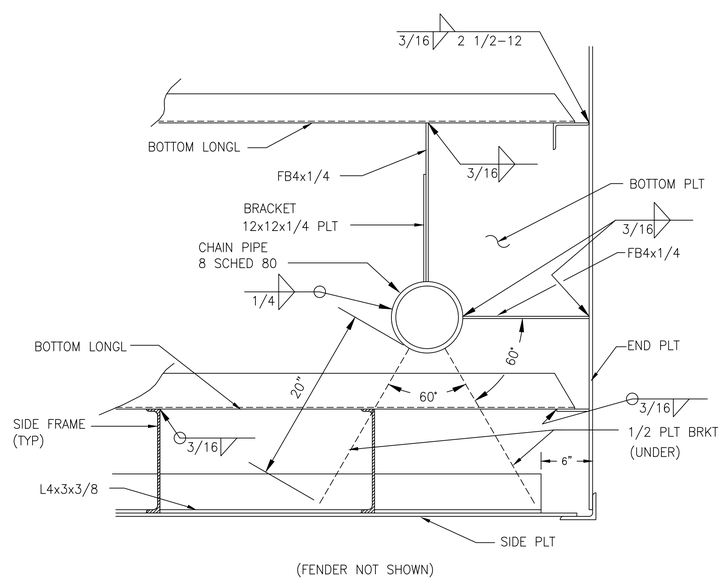

(FENDER NOT SHOWN)

DETAIL – FRAMING IN
VICINITY OF CHAIN PIPE
4 C6 C6
SCALE: 1 1/2" = 1'-0"

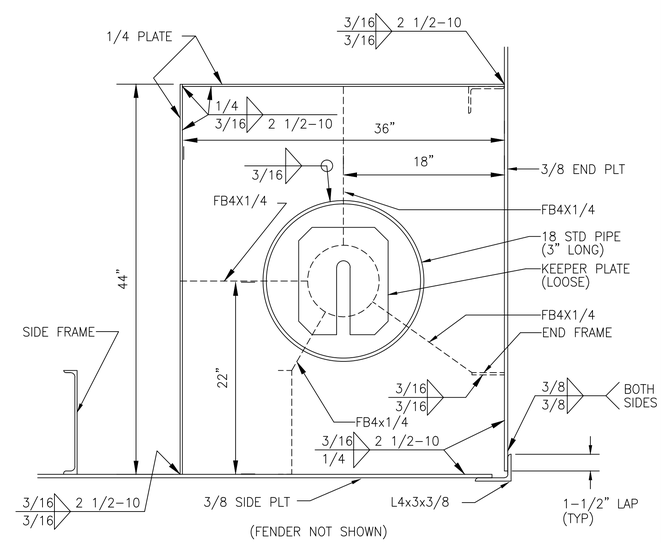

(FENDER NOT SHOWN)

DETAIL
CHAIN WELL
5 C6 C6
SCALE: 1 1/2" = 1'-0"

IF THIS SHEET IS LESS THAN 24X36
REDUCE SHOWN SCALE ACCORDINGLY.

REGISTERED PROFESSIONAL ENGINEER
GARY E. GILL
36482
Exp.06/30/00
CIVIL
STATE OF CALIFORNIA

ART ANDERSON
A S S O C I A T E S
148 FIRST STREET BREMERTON, WA 98337
(360) 479-5800 FAX 479-5805
65 MARION STREET SEATTLE, WA 98104
(206) 622-6221

kpff Consulting Engineers
1201 Third Avenue, Suite 900 Seattle, WA 98101
(206) 622-5822 Fax (206) 622-8130

VALLEJO FERRY TERMINAL DOCK
CITY OF VALLEJO, CA.

FLOAT STRUCTURE DETAILS

DESIGNED	JRL
DRAWN	ELR
CHECKED	JRL/GEG
DATE	8-19-97
JOB NO	FVL03
SHT NO	C6

ALL DRAWINGS REQUIRE FIELD/SITE VERIFICATION - INFORMATIONAL USE ONLY

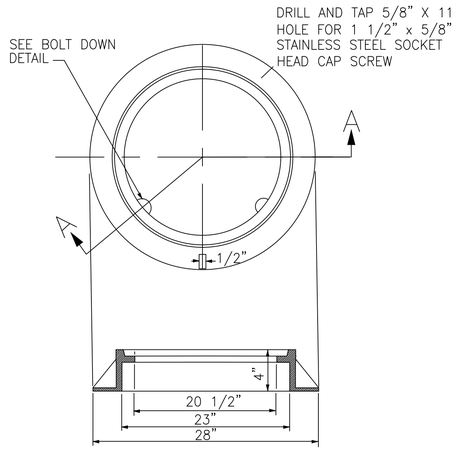

SECTION A–A

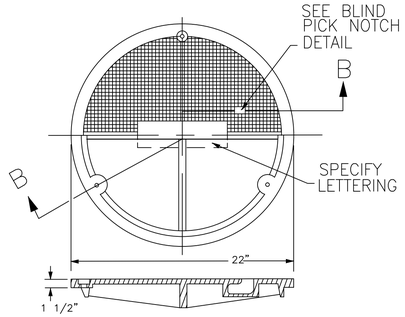

SECTION B–B

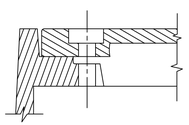

BOLT–DOWN DETAIL

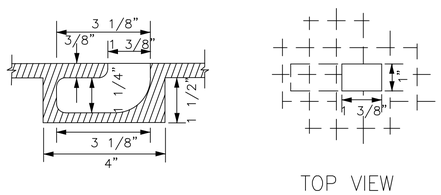

BLIND PICK NOTCH DETAIL

DETAIL
BOLT–DOWN/WATERTIGHT MANHOLE COVER

1 C7 C7

SCALE: NONE

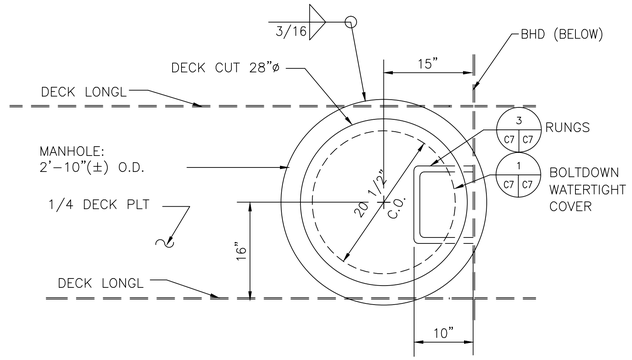

DETAIL
MANHOLE ACCESS TO VOIDS

2 C3 C7

SCALE: NONE

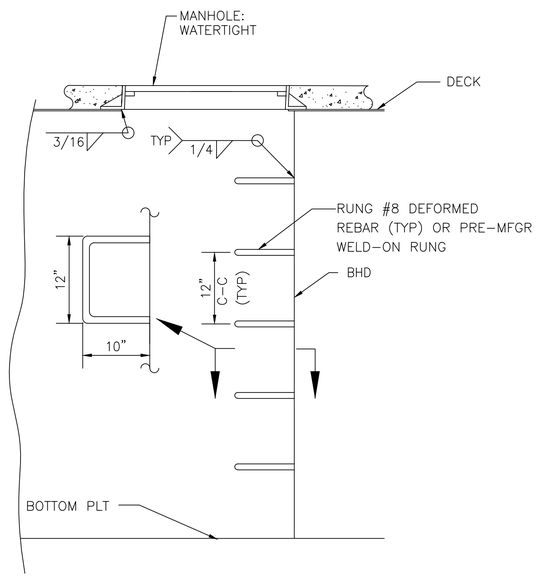

DETAIL
RUNGS

3 C7 C7

SCALE: 1" = 1'–0"

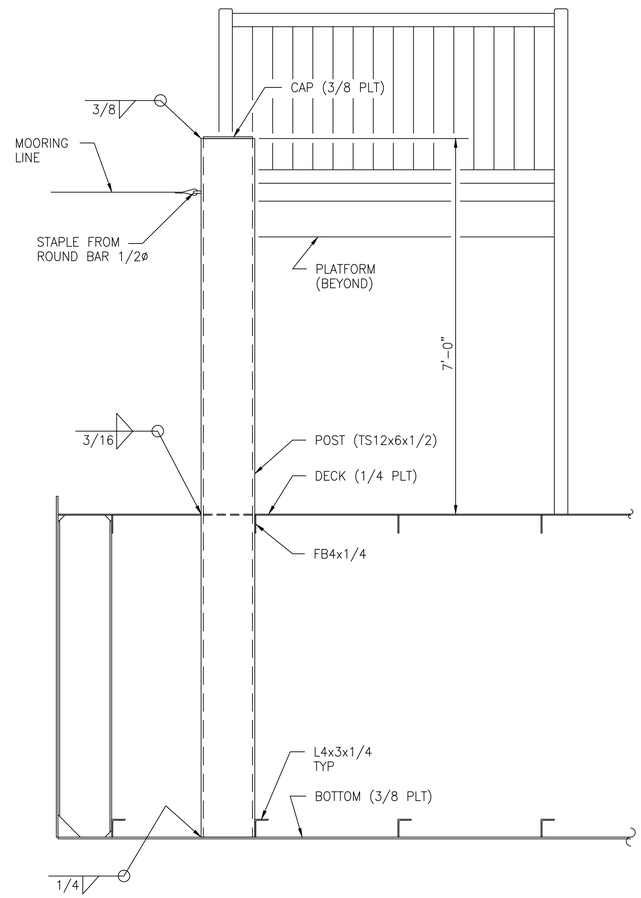

DETAIL
WINCH MOUNTING POST

4 C3 C7

SCALE: 3/4" = 1'–0"

IF THIS SHEET IS LESS THAN 24X36
REDUCE SHOWN SCALE ACCORDINGLY.

REGISTERED PROFESSIONAL ENGINEER
GARY E. GILL
36482
Exp.06/30/00
CIVIL
STATE OF CALIFORNIA

ART ANDERSON ASSOCIATES
148 FIRST STREET, BREMERTON, WA 98337 (360) 479-6900 FAX 479-6905
65 MARION STREET, SEATTLE, WA 98104 (206) 622-6221

kpff Consulting Engineers
1201 Third Avenue, Suite 900 Seattle, WA 98101
(206) 622-5822 Fax (206) 622-8130

VALLEJO FERRY TERMINAL DOCK
CITY OF VALLEJO, CA.

FLOAT STRUCTURE DETAILS

DESIGNED	AW
DRAWN	ELR
CHECKED	JRL/GEG
DATE	8–19–97
JOB NO	FVL03
SHT NO	C7

ALL DRAWINGS REQUIRE FIELD/SITE VERIFICATION - INFORMATIONAL USE ONLY

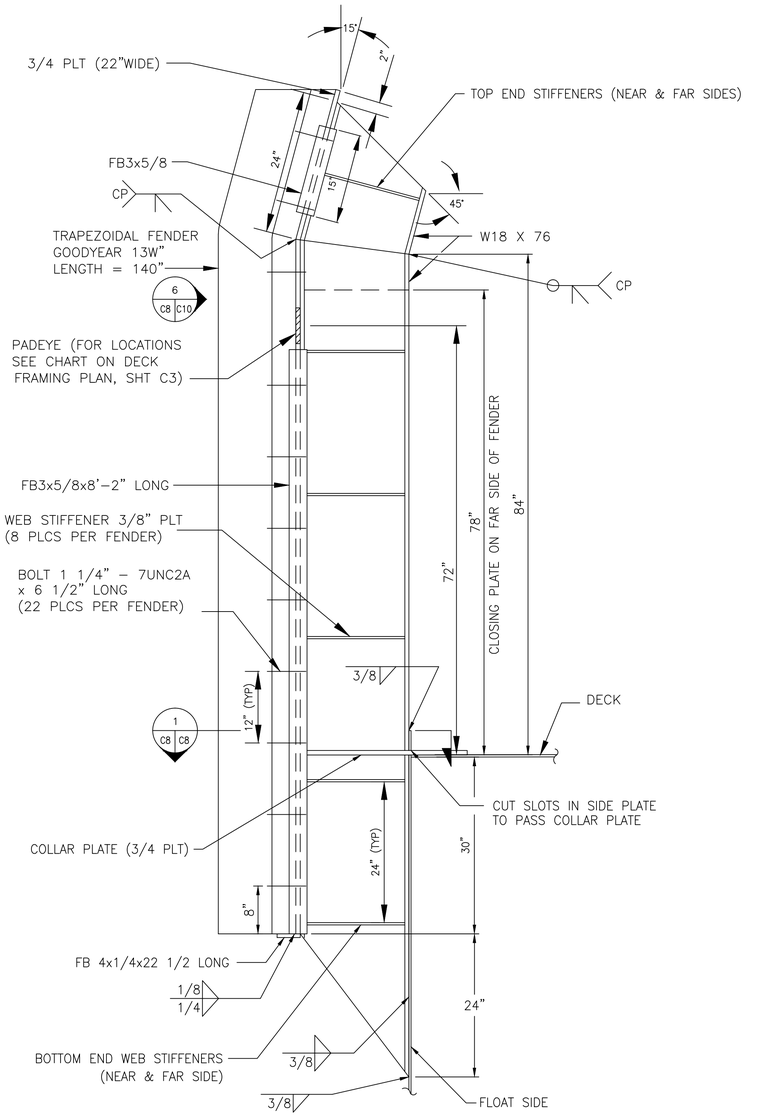

THIS DETAIL APPLIES TO THE FENDERS MARKED "A", "B", "D", AND "E" ON SHEET C3.

A / C3 C8 ELEVATION VERTICAL FENDER

SCALE: 1" = 1'-0"

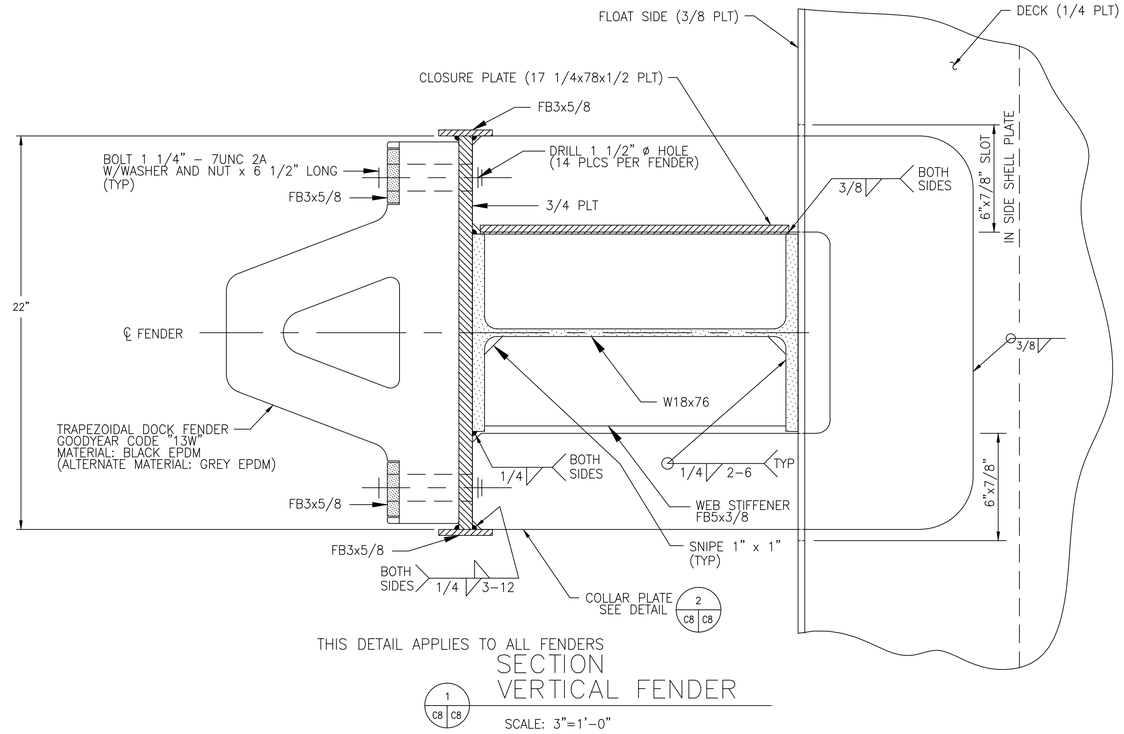

THIS DETAIL APPLIES TO ALL FENDERS

1 / C8 C8 SECTION VERTICAL FENDER

SCALE: 3"=1'-0"

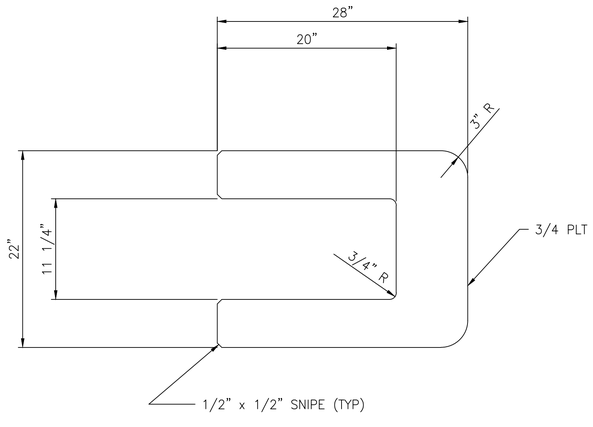

2 / C8 C8 DETAIL COLLAR PLATE

SCALE: 1 1/2"=1'-0"

TYPICAL 10 PLACES

IF THIS SHEET IS LESS THAN 24X36
REDUCE SHOWN SCALE ACCORDINGLY.

REGISTERED PROFESSIONAL ENGINEER
GARY E. GILL
36482
Exp.06/30/00
CIVIL
STATE OF CALIFORNIA

ART ANDERSON ASSOCIATES
148 FIRST STREET BREMERTON, WA 98337
(360) 479-5800 FAX 479-5805
65 MARION STREET SEATTLE, WA 98104
(206) 622-6221

kpff Consulting Engineers
1201 Third Avenue, Suite 900 Seattle, WA 98101
(206) 622-5822 Fax (206) 622-8130

VALLEJO FERRY TERMINAL DOCK
CITY OF VALLEJO, CA.

FENDER DETAILS

DESIGNED	AW
DRAWN	ELR
CHECKED	JRL/GEG
DATE	8-19-97
JOB NO	FVL03
SHT NO	C8

ALL DRAWINGS REQUIRE FIELD/SITE VERIFICATION - INFORMATIONAL USE ONLY

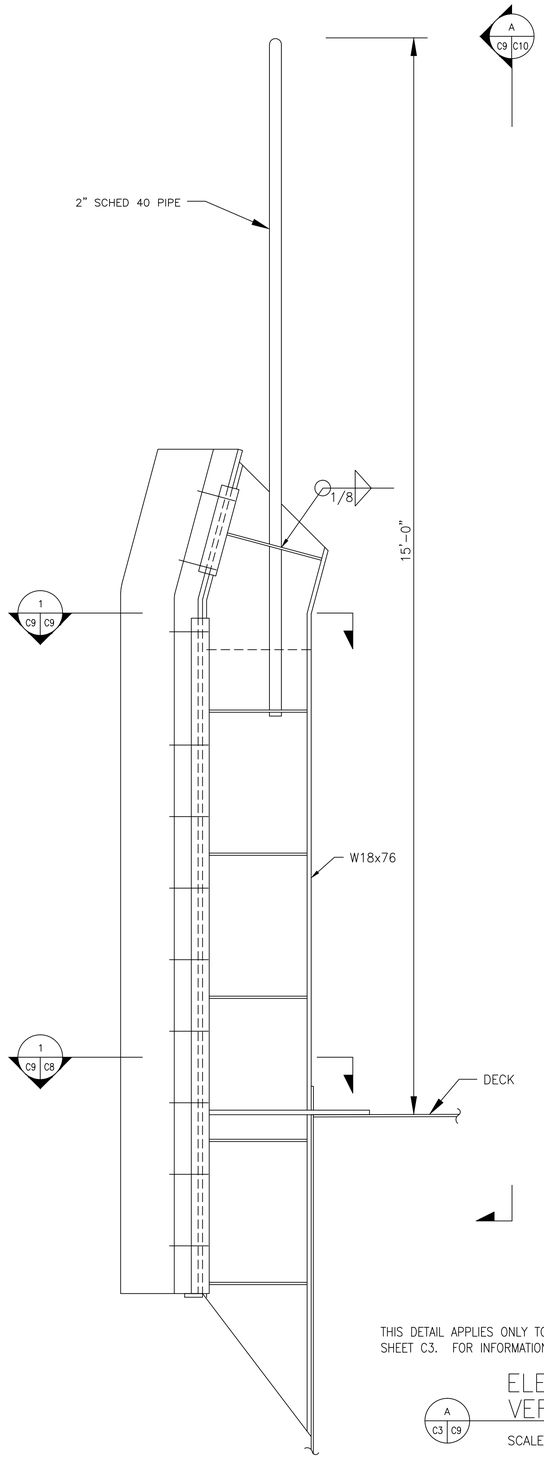

THIS DETAIL APPLIES ONLY TO FENDERS MARKED "C" ON SHEET C3. FOR INFORMATION NOT SHOWN SEE ELEVATION A/C8

A C3 C9 ELEVATION VERTICAL FENDER

SCALE: 1" = 1'-0"

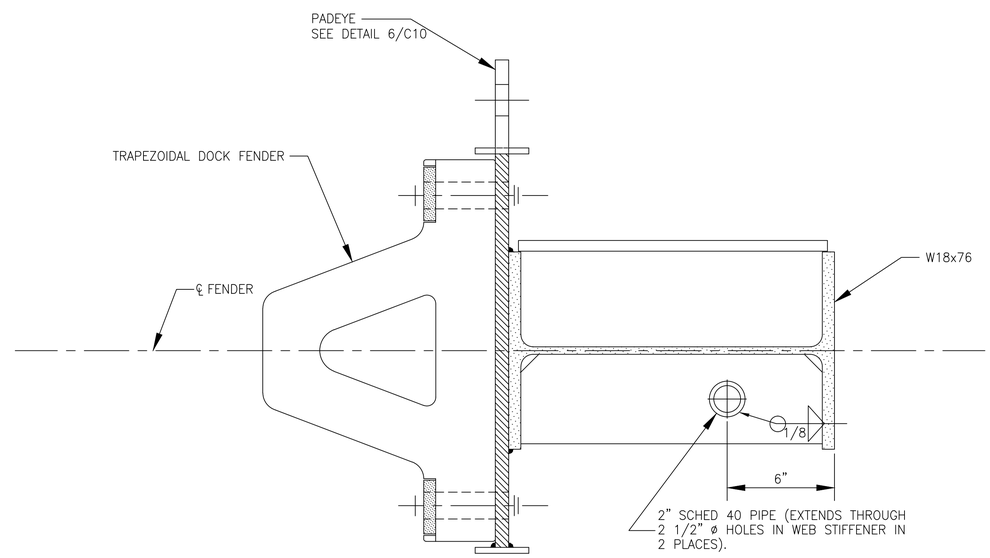

1 C9 C9 DETAIL VERTICAL FENDER

SCALE: 3"=1'-0"

THIS DETAIL APPLIES ONLY TO FENDERS MARKED "C" ON SHEET C3. FOR INFORMATION NOT SHOWN SEE SECTION 1/C8

IF THIS SHEET IS LESS THAN 24X36 REDUCE SHOWN SCALE ACCORDINGLY.

REGISTERED PROFESSIONAL ENGINEER
GARY E. GILL
36482
Exp.06/30/00
CIVIL
STATE OF CALIFORNIA

ART ANDERSON ASSOCIATES
148 FIRST STREET BREMERTON, WA 98337
(360) 479-5600 FAX 479-5605
65 MARION STREET SEATTLE, WA 98104
(206) 622-6221

kpff Consulting Engineers
1201 Third Avenue, Suite 900 Seattle, WA 98101
(206) 622-5822 Fax (206) 622-8130

VALLEJO FERRY TERMINAL DOCK
CITY OF VALLEJO, CA.

FENDER DETAILS

DESIGNED	AW
DRAWN	ELR
CHECKED	JRL/GEG
DATE	8-19-97
JOB NO	FVL03
SHT NO	C9

ALL DRAWINGS REQUIRE FIELD/SITE VERIFICATION - INFORMATIONAL USE ONLY

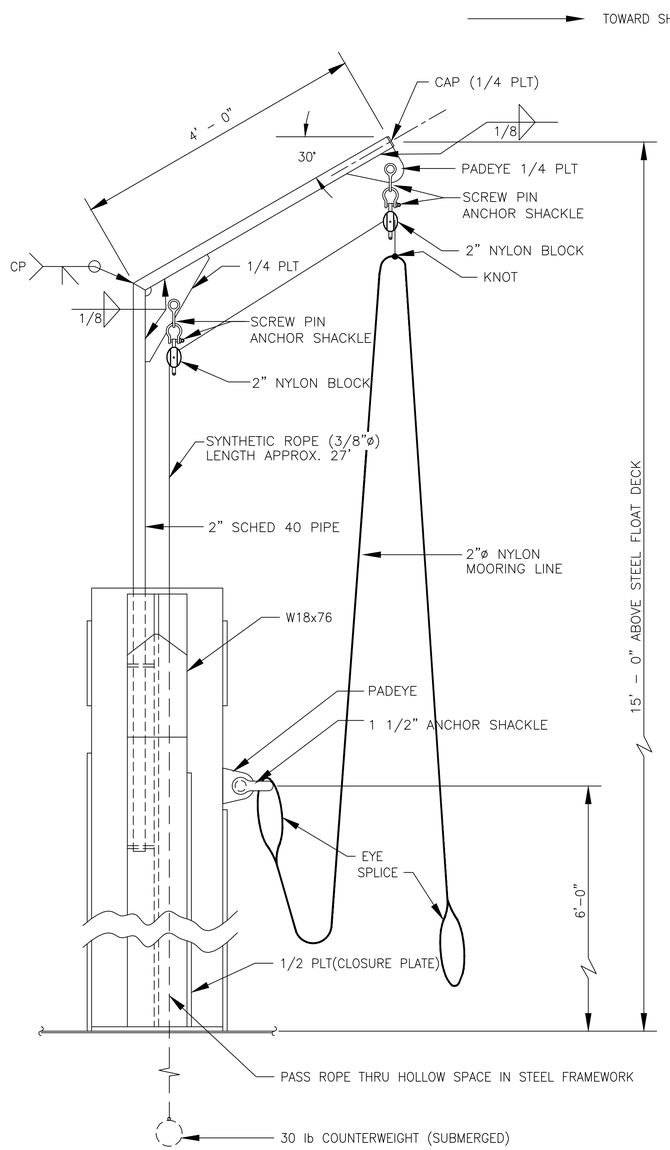

NOTE: FENDER "C" ON THE UPSTREAM SIDE IS SHOWN, (FENDER "C" ON THE DOWNSTREAM SIDE IS SIMILAR TO OPPOSITE HAND.)

A / C9 C10
SECTION
DAVIT FOR MOORING LINE
SCALE: 1" = 1' - 0"

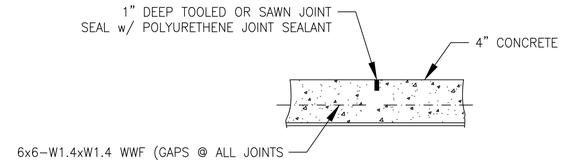

1 / C10 C10
DETAIL
DECK PAVING JOINT
SCALE: 1 1/2" = 1' - 0"

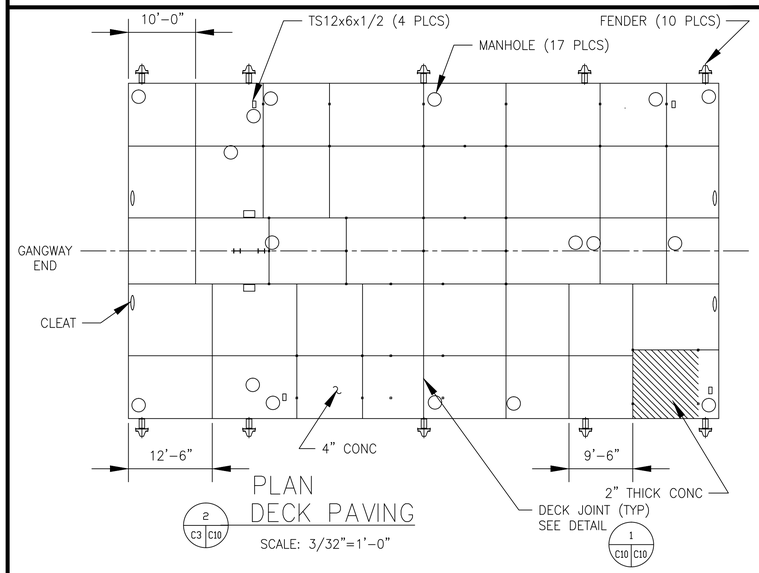

2 / C3 C10
PLAN
DECK PAVING
SCALE: 3/32"=1'-0"

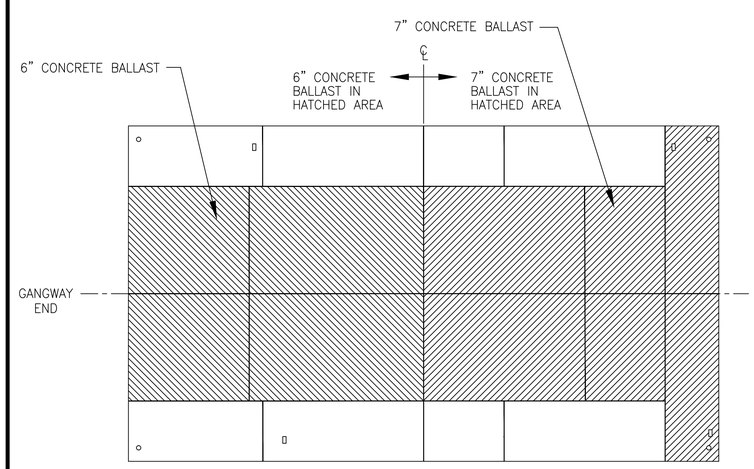

3 / C3 C10
PLAN
BALLAST
SCALE: 3/32"=1'-0"

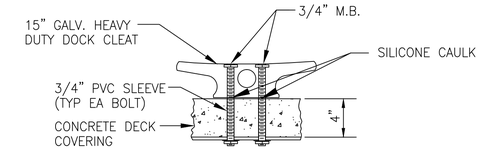

4 / C3 C10
DETAIL
SHIP DOCK CLEAT
SCALE: 1 1/2" = 1' - 0"

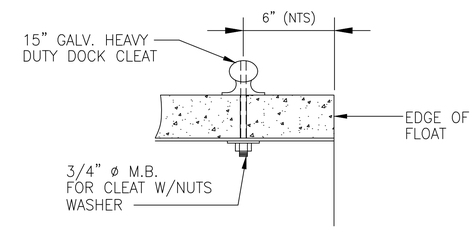

5 / C3 C10
DETAIL
SHIP DOCK CLEAT
SCALE: 1 1/2" = 1'-0"

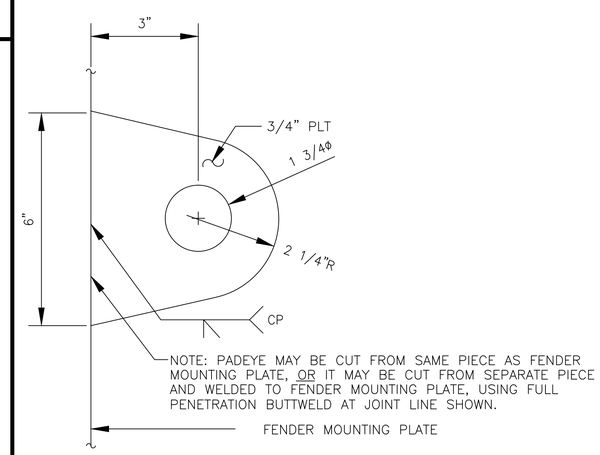

6 / C8 C10
DETAIL
PADEYE FOR ALL FENDERS
SCALE: 6"=1'-0"

IF THIS SHEET IS LESS THAN 24X36 REDUCE SHOWN SCALE ACCORDINGLY.

REGISTERED PROFESSIONAL ENGINEER
GARY E. GILL
36482
Exp.06/30/00
CIVIL
STATE OF CALIFORNIA

ART ANDERSON ASSOCIATES
148 FIRST STREET, BREMERTON, WA 98337 (360) 479-3910 FAX 479-3805
65 MARION STREET, SEATTLE, WA 98104 (206) 622-6221

kpff Consulting Engineers
1201 Third Avenue, Suite 900 Seattle, WA 98101
(206) 622-5822 Fax (206) 622-8130

VALLEJO FERRY TERMINAL DOCK
CITY OF VALLEJO, CA.

FENDER AND CLEAT DETAILS

DESIGNED	AW
DRAWN	ELR
CHECKED	JRL/GEG
DATE	8-19-97
JOB NO	FVL03
SHT NO	C10

ALL DRAWINGS REQUIRE FIELD/SITE VERIFICATION - INFORMATIONAL USE ONLY

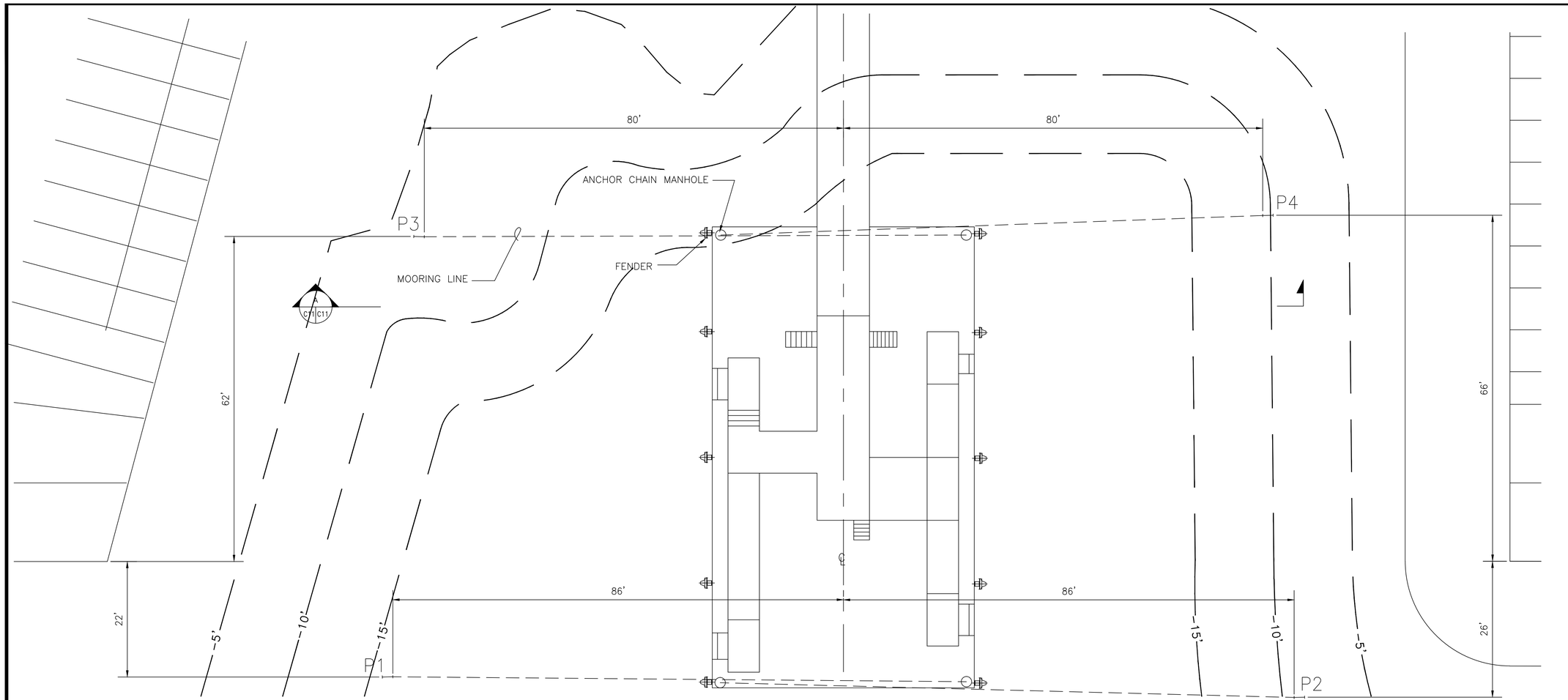

PLAN

SCALE: 1" = 10'-0"

MOORING LINE SCHEDULE			
MOORING LINE NO.	LENGTH OF SEGMENTS (FT.)	PRETENSION (LBS.)	
		(-2.70 FT.)*	(+7.00 FT.)*
1	126' (1 1/4" STUD LINK CHAIN)	2,370	4,010
2	126' (1 1/4" STUD LINK CHAIN)	2,370	4,010
3	120 (1 1/4" STUD LINK CHAIN)	2,030	3,500
4	120 (1 1/4" STUD LINK CHAIN)	2,370	4,010

* TIDE LEVEL

1. THE NOMINAL MOORING LINE LENGTHS SHOWN INCLUDE LENGTH OF HARDWARE SUCH AS SHACKLES AND LINKS.

2. NOMINAL MOORING LINE LENGTHS HAVE BEEN DETERMINED USING THE BOTTOM ELEVATION AND HORIZONTAL PILE LOCATIONS. THE NOMINAL MOORING LINE LENGTH INCLUDES AN ADDITIONAL 10 FT. FOR MINOR ADJUSTMENTS. FIELD ADJUSTMENTS TO THE MOORING LINE LENGTH MAY BE NECESSARY AS REQUIRED BY THE ACTUAL "AS DRIVEN" LOCATION OF THE PILES AND THE SPECIFIED PRETENSION FORCE. CONTRACTOR SHALL PROVIDE SUFFICIENT MOORING LINE LENGTHS AS WELL AS HARDWARE AND TOOLS TO ADJUST MOORING LINE LENGTH.

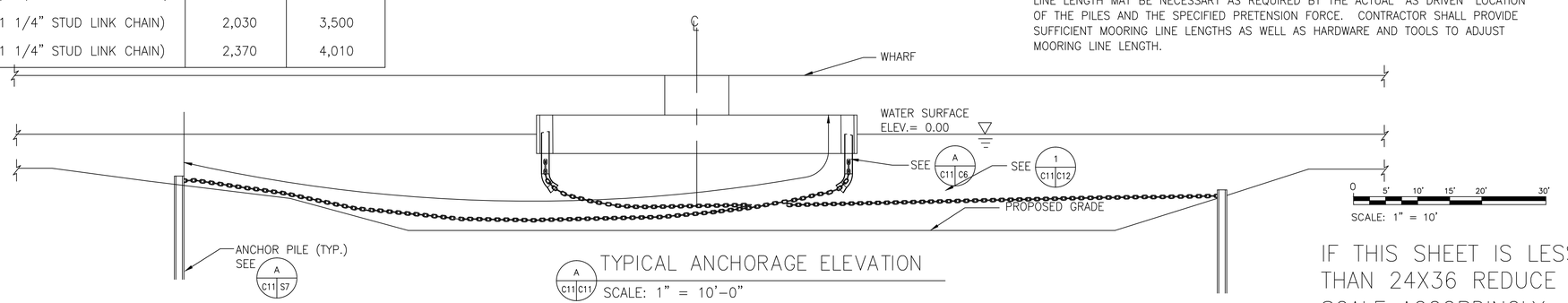

A C11 C11 TYPICAL ANCHORAGE ELEVATION

SCALE: 1" = 10'-0"

IF THIS SHEET IS LESS THAN 24X36 REDUCE SCALE ACCORDINGLY.

REGISTERED PROFESSIONAL ENGINEER
GARY E. GILL
36482
Exp.06/30/00
CIVIL
STATE OF CALIFORNIA

ART ANDERSON ASSOCIATES
148 FIRST STREET BREMERTON, WA 98337
(360) 479-5600 FAX 479-5605
65 MARION STREET SEATTLE, WA 98104
(206) 622-6221

kpff Consulting Engineers
1201 Third Avenue, Suite 900 Seattle, WA 98101
(206) 622-5822 Fax (206) 622-8130

VALLEJO FERRY TERMINAL DOCK
CITY OF VALLEJO, CA.

ANCHORAGE PLAN AND ELEVATION

DESIGNED	JRL
DRAWN	ELR
CHECKED	JRL/GEG
DATE	8-19-97
JOB NO	FVL03
SHT NO	C11

ALL DRAWINGS REQUIRE FIELD/SITE VERIFICATION - INFORMATIONAL USE ONLY

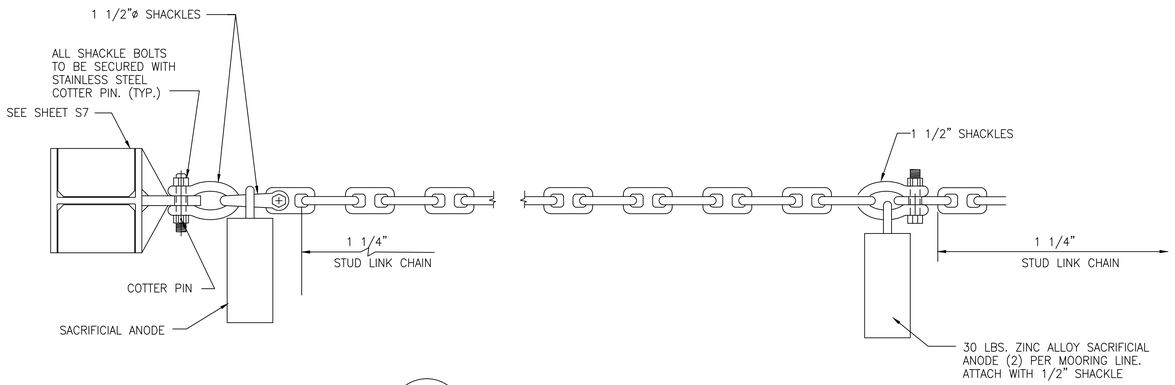

1 / C11 C12 MOORING LINE CONNECTION

SCALE: 1" = 1'-0"

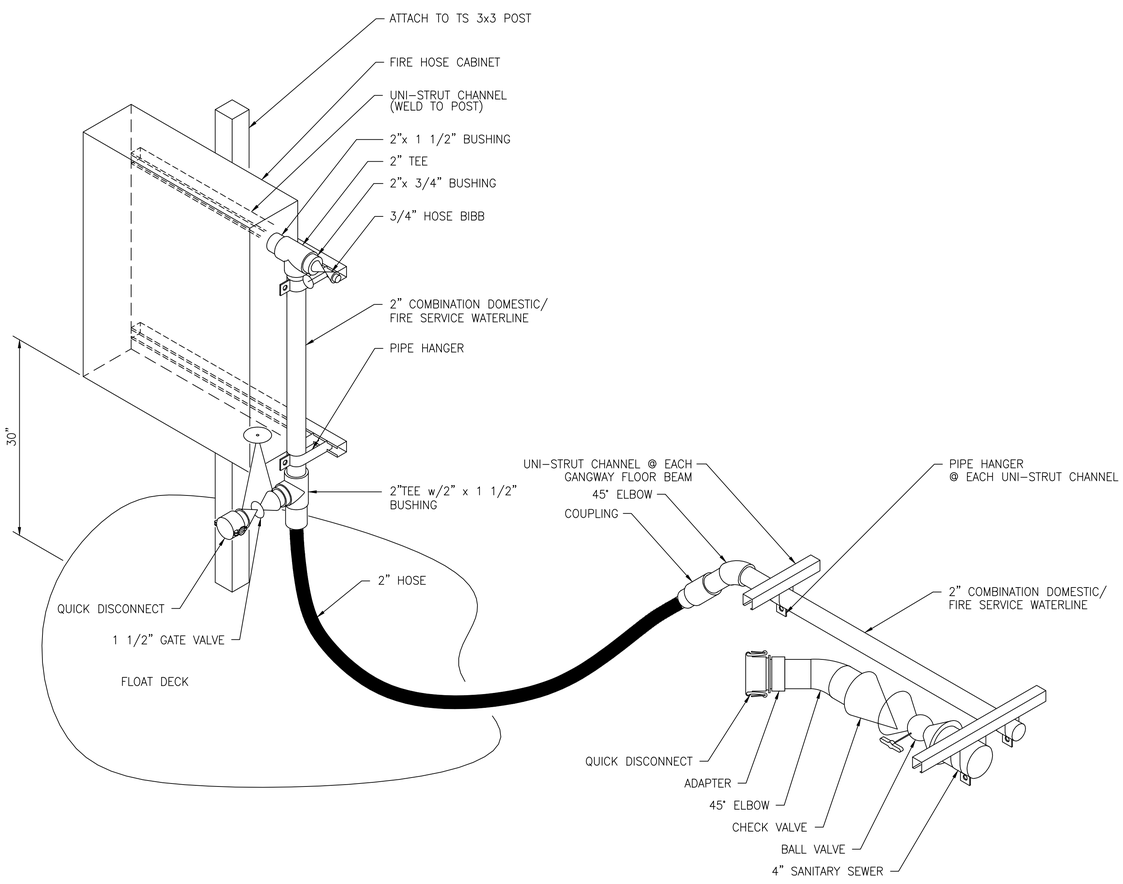

2 / C12 C12 PIPE UTILITY CONNECTIONS

SCALE: NONE

NOTES:

1. PROVIDE 60 FEET OF 3" DIAMETER HOSE FOR SEWER SHORE CONNECTION AND ONE 3" END CAP. CONNECT TO SEWER HOOKUP.
2. PROVIDE 60 FEET OF 1-1/2" DIAMETER HOSE FOR WATER SHORE CONNECTION AND ONE 1-1/2" END CAP. CONNECT TO WATER HOOKUP.

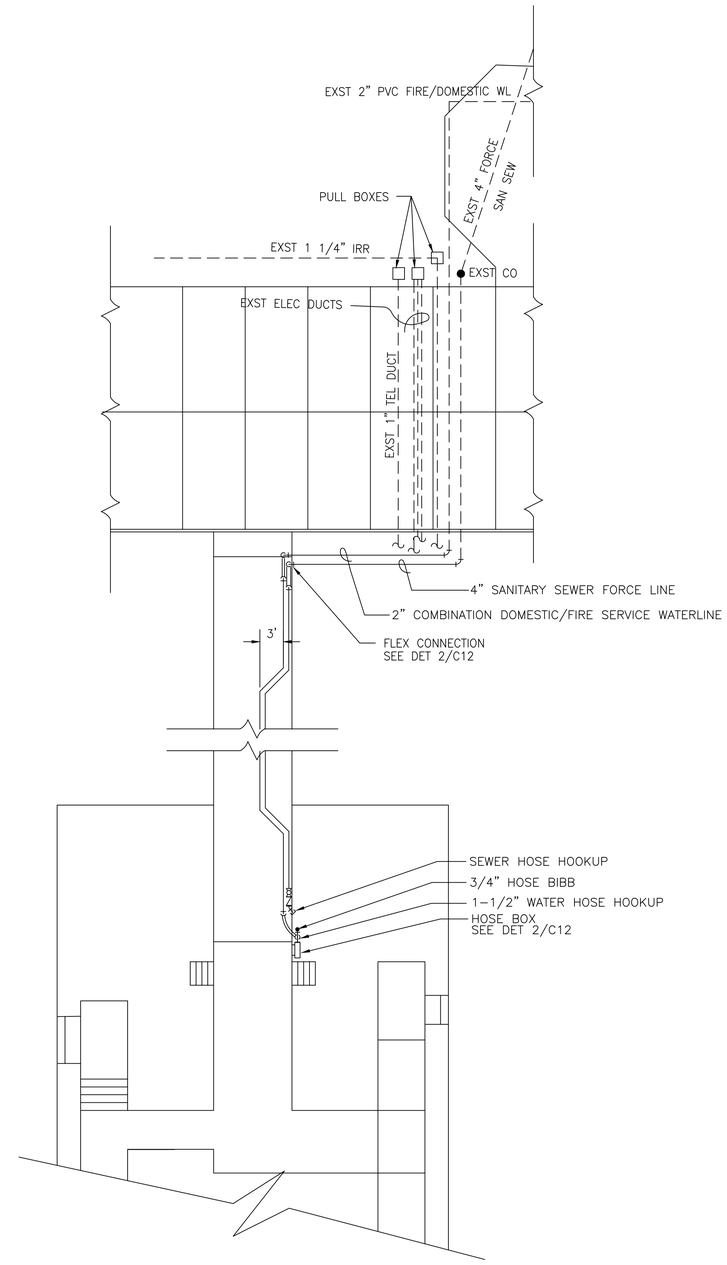

UTILITIES PLAN

SCALE: 1' = 10'

0 5' 10' 15' 20' 30'

SCALE: 1" = 10'

IF THIS SHEET IS LESS THAN 24X36 REDUCE SHOWN SCALE ACCORDINGLY.

REGISTERED PROFESSIONAL ENGINEER
GARY E. GILL
36482
Exp.06/30/00
CIVIL
STATE OF CALIFORNIA

ART ANDERSON ASSOCIATES
148 FIRST STREET BREMERTON, WA 98337 (360) 479-5600 FAX 479-5605
65 MARION STREET SEATTLE, WA 98104 (206) 622-621

kpff Consulting Engineers
1201 Third Avenue, Suite 900 Seattle, WA 98101 (206) 622-5822 Fax (206) 622-8130

VALLEJO FERRY TERMINAL DOCK
CITY OF VALLEJO, CA.

UTILITY PLAN AND ANCHORAGE DETAILS

DESIGNED	JRL
DRAWN	ELR
CHECKED	JRL/GEG
DATE	8-19-97
JOB NO	FVL03
SHT NO	C12

ALL DRAWINGS REQUIRE FIELD/SITE VERIFICATION - INFORMATIONAL USE ONLY

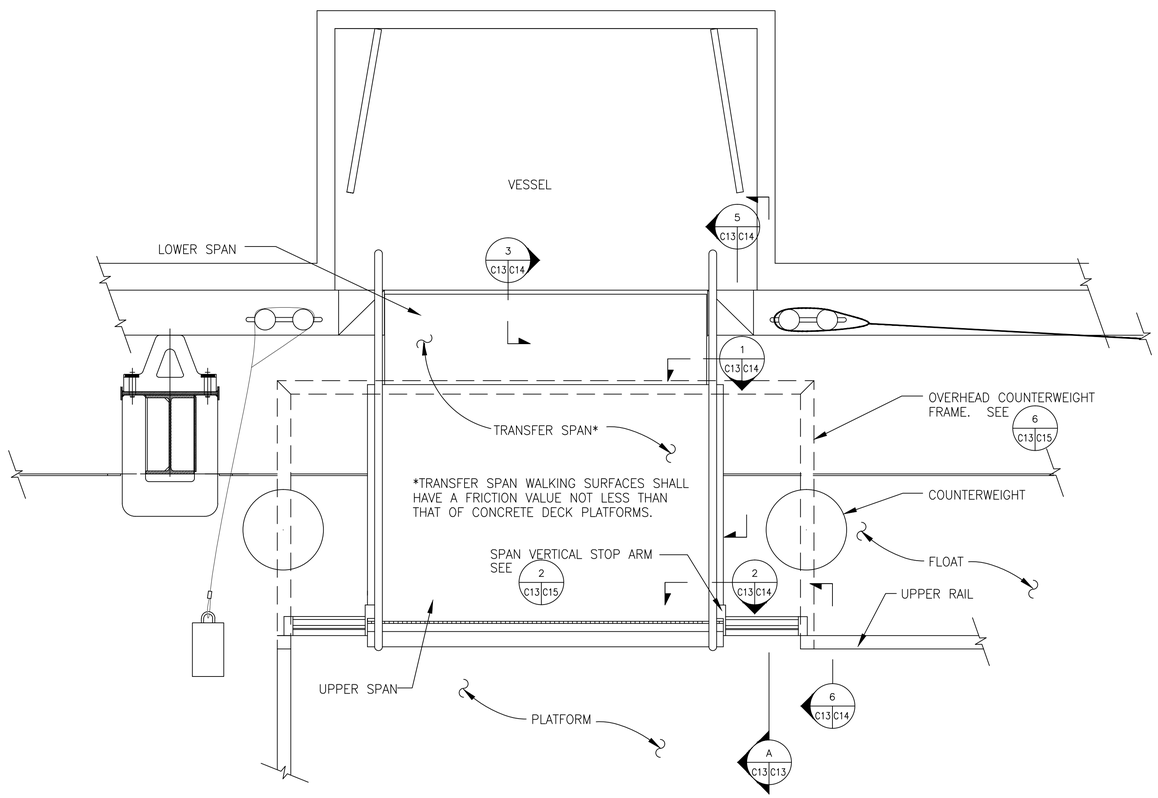

1 C13 C13 TRANSFER SPAN PLAN
SCALE: 3/4" = 1'-0"

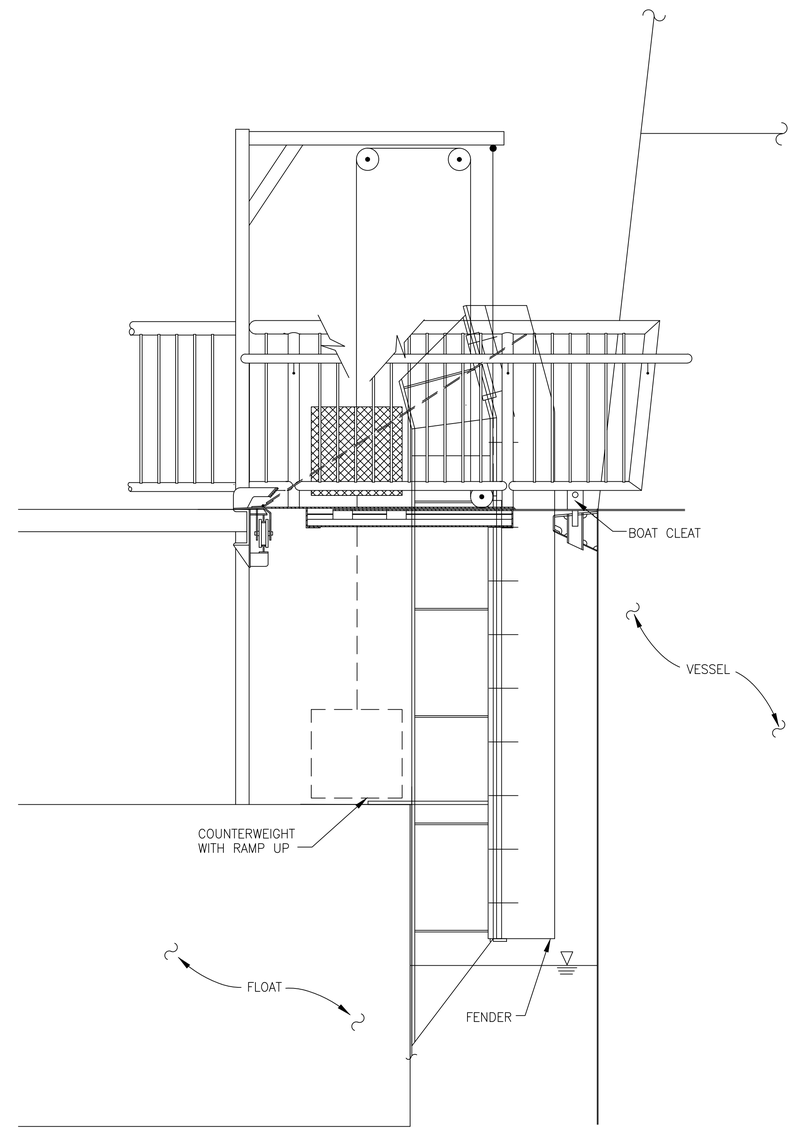

A C13 C13 TRANSFER SPAN ELEVATION
SCALE: 3/4" = 1'-0"

NOTE:
TRANSFER SPAN SCHEME MAY BE MODIFIED BY THE CONTRACTOR PROVIDED ALL SPECIFIED PERFORMANCE REQUIREMENTS ARE MET. DRAWING IS TO ILLUSTRATE PERFORMANCE REQUIREMENTS ONLY FOR THIS DESIGN-BUILD ITEM.

IF THIS SHEET IS LESS THAN 24X36 REDUCE SHOWN SCALE ACCORDINGLY.

REGISTERED PROFESSIONAL ENGINEER
GARY E. GILL
36482
Exp.06/30/00
CIVIL
STATE OF CALIFORNIA

ART ANDERSON ASSOCIATES
148 FIRST STREET BREMERTON, WA 98337
(360) 479-5800 FAX 479-5805
65 MARION STREET SEATTLE, WA 98104
(206) 622-6221

kpff Consulting Engineers
1201 Third Avenue, Suite 900 Seattle, WA 98101
(206) 622-5822 Fax (206) 622-8130

VALLEJO FERRY TERMINAL DOCK
CITY OF VALLEJO, CA.

TRANSFER SPAN

DESIGNED	AKB
DRAWN	ELR
CHECKED	JRL/GEG
DATE	8-19-97
JOB NO	FVL03
SHT NO	C13

ALL DRAWINGS REQUIRE FIELD/SITE VERIFICATION - INFORMATIONAL USE ONLY

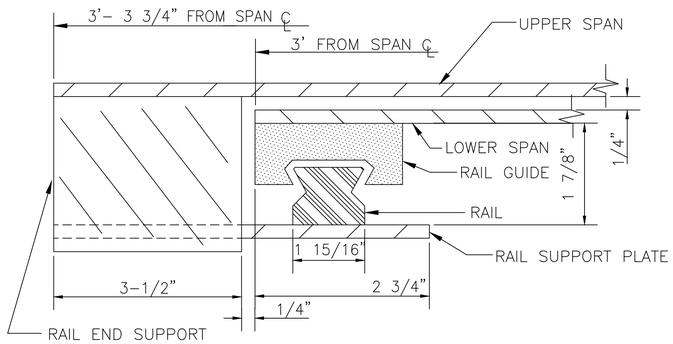

SECTIONAL DETAIL OF TRANSFER SPAN SHOWING SPAN RAIL AND SUPPORT

1 C13 C14

SCALE: NONE

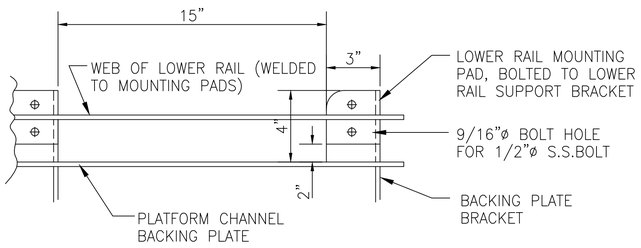

LOWER RAIL SUPPORT BRACKETS SHOWING LOWER RAIL MOUNTING PADS

4 C14 C14

SCALE: NONE

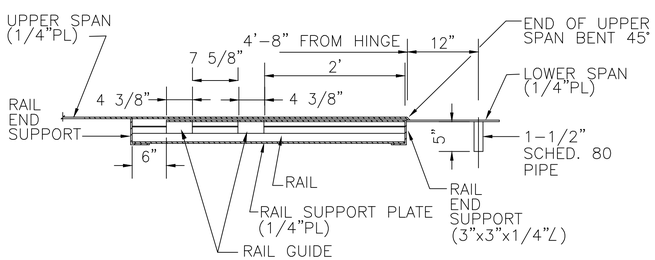

NOTE:
1/4" GAP EXISTS BETWEEN UPPER AND LOWER SPANS

SIDE VIEW OF TRANSFER SPAN SHOWING SPAN RAILS

5 C13 C14

SCALE: NONE

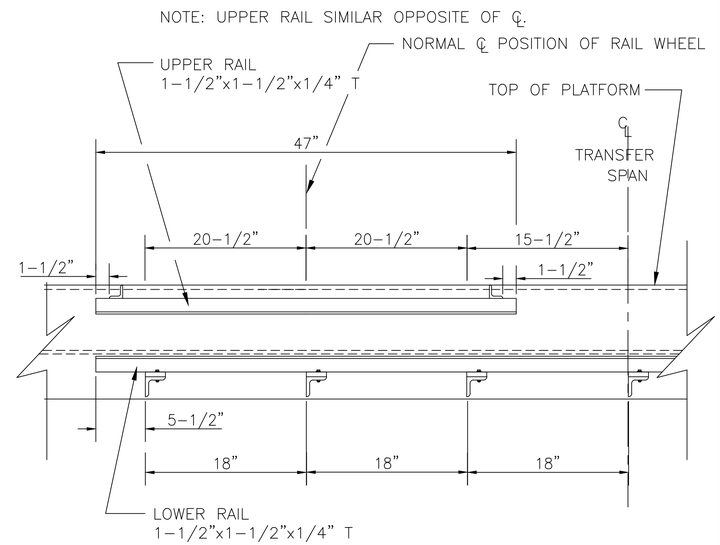

ELEVATION OF PLATFORM SHOWING RAILS

2 C13 C14

SCALE: NONE

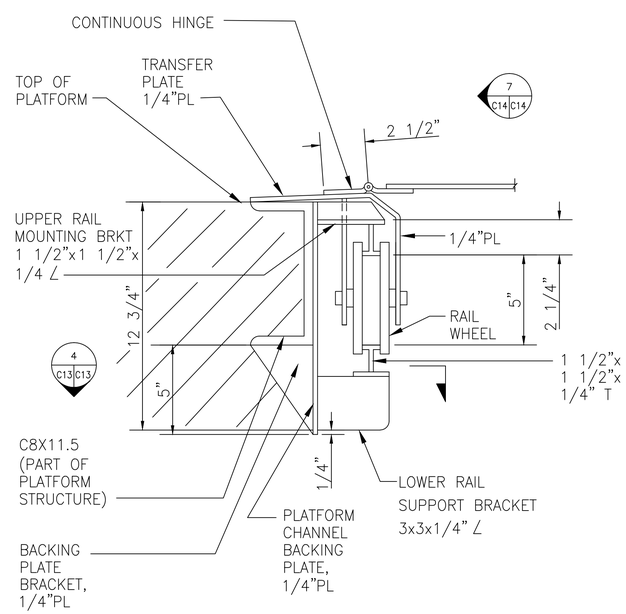

SECTION OF PLATFORM END

6 C13 C14

SCALE: NONE

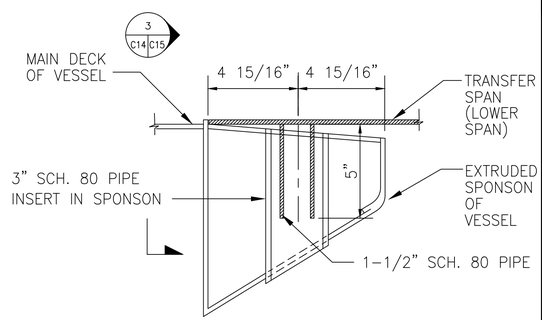

DETAIL – VESSEL END TRANSFER SPAN

3 C13 C14

SCALE: NONE

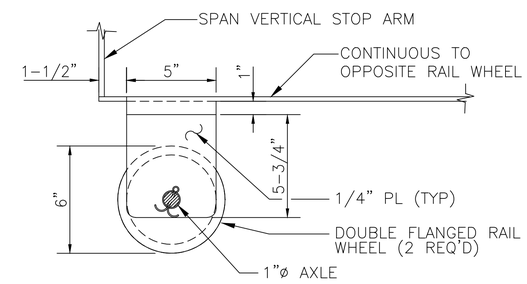

DETAIL – RAIL WHEEL

7 C14 C14

SCALE: NONE

NOTE:
TRANSFER SPAN SCHEME MAY BE MODIFIED BY THE CONTRACTOR PROVIDED ALL SPECIFIED PERFORMANCE REQUIREMENTS ARE MET. DRAWING IS TO ILLUSTRATE PERFORMANCE REQUIREMENTS ONLY FOR THIS DESIGN-BUILD ITEM.

IF THIS SHEET IS LESS THAN 24X36 REDUCE SHOWN SCALE ACCORDINGLY.

REGISTERED PROFESSIONAL ENGINEER
GARY E. GILL
36482
Exp.06/30/00
CIVIL
STATE OF CALIFORNIA

ART ANDERSON ASSOCIATES
148 FIRST STREET BREMERTON, WA 98337 (360) 377-6010 FAX 479-9605
65 MARION STREET SEATTLE, WA 98104 (206) 622-6221

kpff Consulting Engineers
1201 Third Avenue, Suite 900 Seattle, WA 98101
(206) 622-5822 Fax (206) 622-8130

VALLEJO FERRY TERMINAL DOCK
CITY OF VALLEJO, CA.

TRANSFER SPAN DETAILS

DESIGNED	WKV
DRAWN	ELR
CHECKED	JRL/GEG
DATE	8-19-97
JOB NO	FVL03
SHT NO	C14

ALL DRAWINGS REQUIRE FIELD/SITE VERIFICATION - INFORMATIONAL USE ONLY

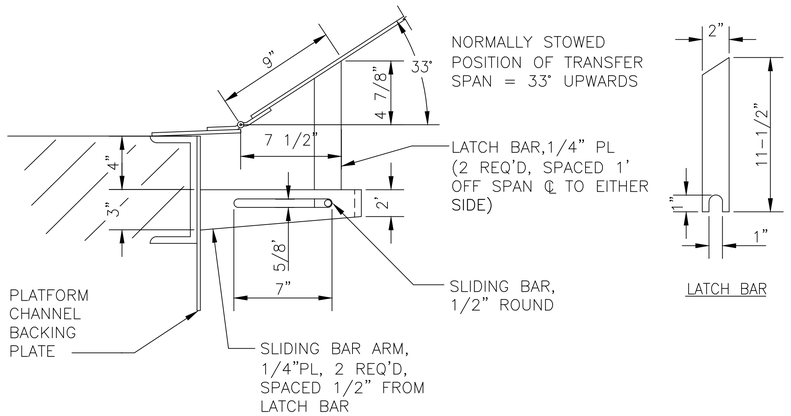

NOTE:
3 SPRINGS REQUIRED FOR ATTACHEMNT TO SLIDING BAR AND PLATFORM CHANNEL BACKING PLATE. SPRINGS SHALL BE SIZED SUCH THAT NO MORE THAN 20 LBS. PULL IS REQUIRED FOR FULL EXTENSION OF THE SLIDING BAR. LATCH BARS SHALL BE CAPABLE OF BEING ENGAGED AND DISENGAGED BY MEANS OF A HANDLE ATTACHED TO THE UNDERSIDE OF THE LOWER SPAN BY A PERSON STANDING ON THE VESSEL. SLIDING BAR TO BE ATTACHED TO HANDLE BY WAY OF SUITABLY SIZED WIRE.

1 C15 C15 SECTION SHOWING LATCH AND SLIDING BAR ARRANGEMENT

SCALE: NONE

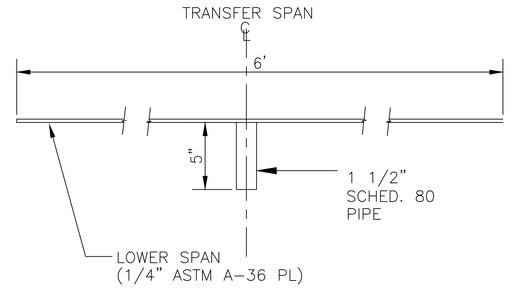

3 C15 C15 SECTION SHOWING VESSEL END OF TRANSFER SPAN

SCALE: NONE

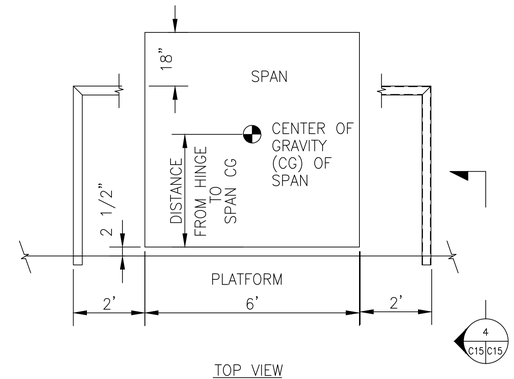

TOP VIEW

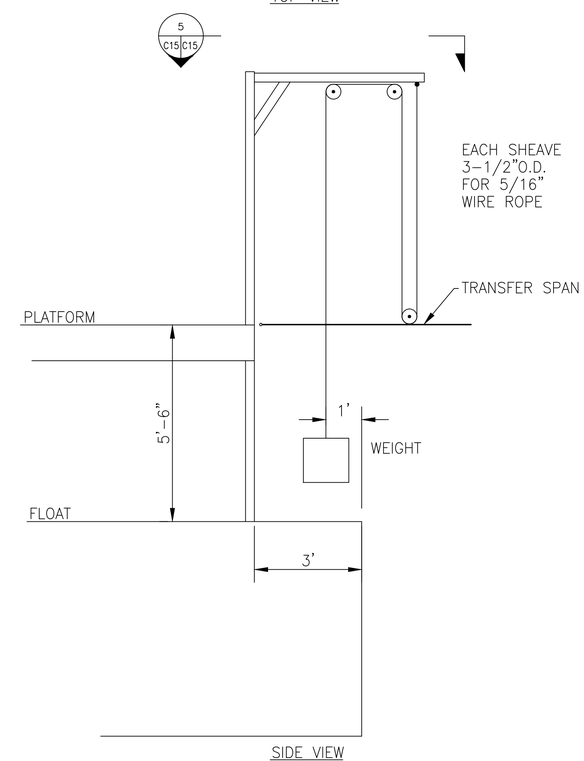

SIDE VIEW

6 C13 C15 TRANSFER SPAN COUNTERBALANCE

SCALE: NONE

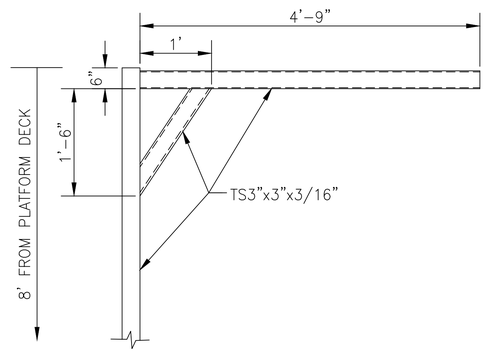

4 C15 C15 COUNTERWEIGHT SUPPORT ARM SIDE VIEW

SCALE: NONE

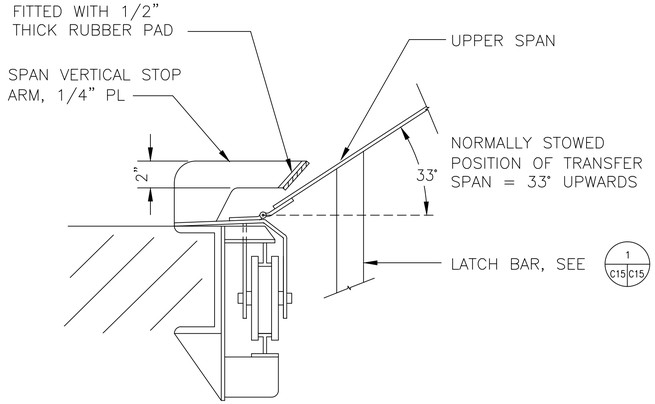

NOTES:

1. STOP ARMS TO BE FITTED TO RAIL WHEEL ASSEMBLY TOP PLATE AT OUTBOARD ENDS OF THE TRANSFER SPAN.
2. END OF STOP ARM TO BE ARRANGED SUCH THAT THE LATCH BAR MAY TRAVEL A FURTHER 1-1/2" IN THE PURELY VERTICAL DIRECTION BEFORE THE UPPER SPAN CONTACTS THE STOP ARM L-FLANGE.

2 C13 C15 SECTION SHOWING SPAN VERTICAL STOP ARM

SCALE: NONE

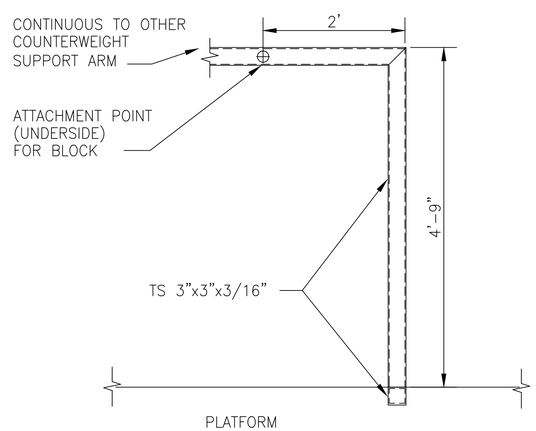

5 C15 C15 COUNTERWEIGHT SUPPORT ARM TOP VIEW

SCALE: NONE

NOTE:
TRANSFER SPAN SCHEME MAY BE MODIFIED BY THE CONTRACTOR PROVIDED ALL SPECIFIED PERFORMANCE REQUIREMENTS ARE MET. DRAWING IS TO ILLUSTRATE PERFORMANCE REQUIREMENTS ONLY FOR THIS DESIGN-BUILD ITEM.

IF THIS SHEET IS LESS THAN 24X36 REDUCE SHOWN SCALE ACCORDINGLY.

REGISTERED PROFESSIONAL ENGINEER
GARY E. GILL
36482
Exp.06/30/00
CIVIL
STATE OF CALIFORNIA

ART ANDERSON ASSOCIATES
148 FIRST STREET, BREMERTON, WA 98337 (360) 479-6800 FAX 479-6805
65 MARION STREET, SEATTLE, WA 98104 (206) 622-6221

kpff Consulting Engineers
1201 Third Avenue, Suite 900 Seattle, WA 98101
(206) 622-5822 Fax (206) 622-8130

VALLEJO FERRY TERMINAL DOCK
CITY OF VALLEJO, CA.

TRANSFER SPAN DETAILS

DESIGNED	WKV
DRAWN	ELR
CHECKED	JRL/GEG
DATE	8-19-97
JOB NO	FVL03
SHT NO	C15

ALL DRAWINGS REQUIRE FIELD/SITE VERIFICATION - INFORMATIONAL USE ONLY

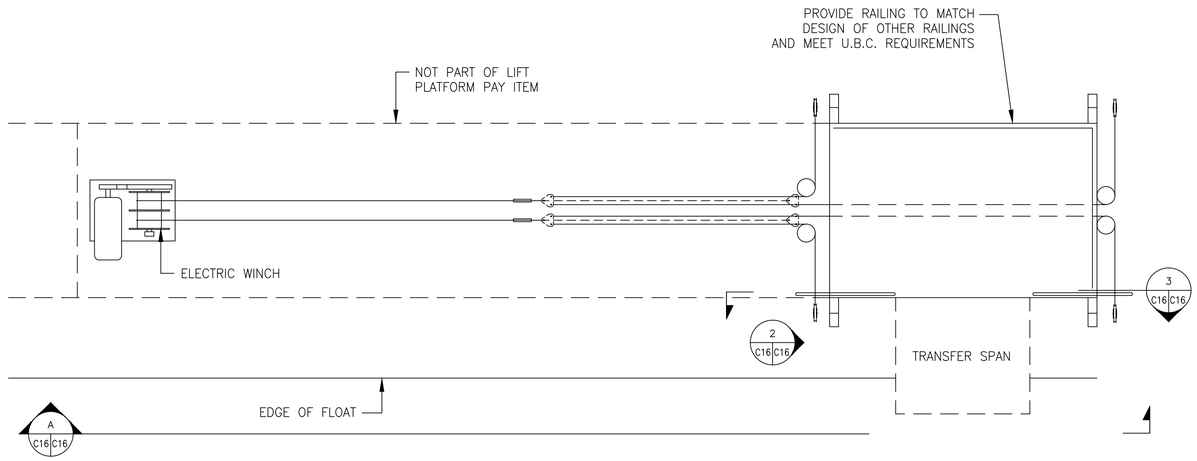

1 C2 C16 LIFT PLATFORM PLAN
SCALE: 3/8" = 1'-0"

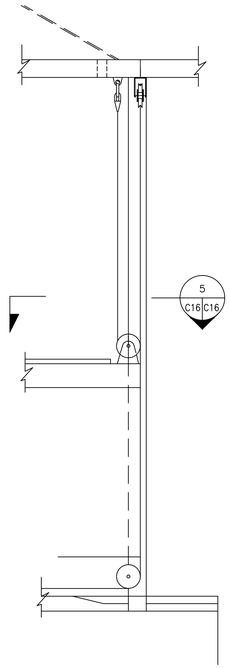

2 C16 C16 LIFT DETAIL
SCALE: 1/2" = 1'-0"

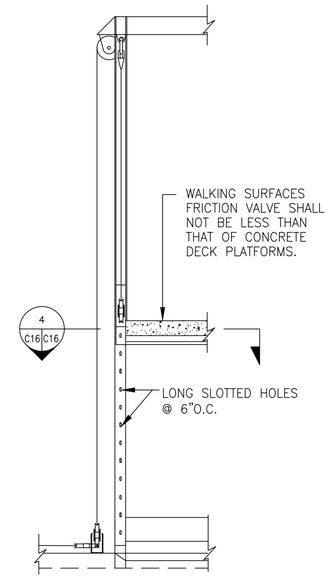

3 C16 C16 LIFT DETAIL
SCALE: 1/2" = 1'-0"

NOTE:
LIFT PLATFORM SCHEME MAY BE MODIFIED BY THE CONTRACTOR PROVIDED ALL SPECIFIED PERFORMANCE REQUIREMENTS ARE MET. DRAWING IS TO ILLUSTRATE PERFORMANCE REQUIREMENTS ONLY FOR THIS DESIGN-BUILD ITEM.

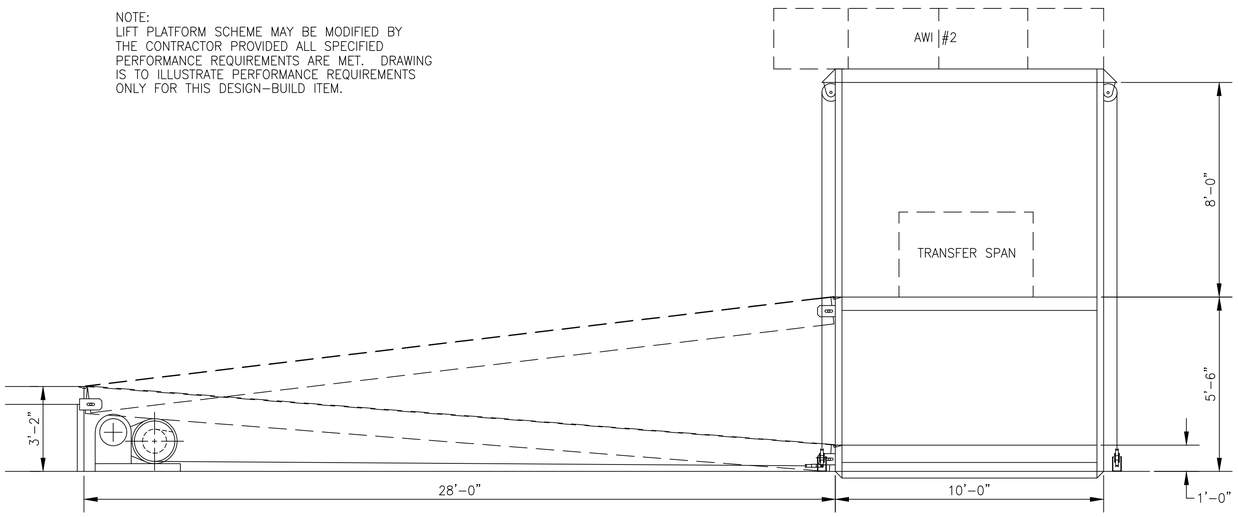

A C16 C16 LIFT PLATFORM ELEVATION
SCALE: 3/8" =1'-0"

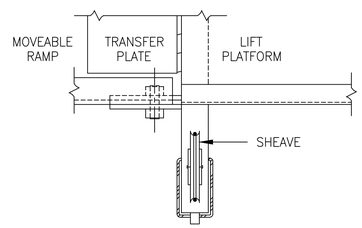

5 C16 C16 PLATFORM DETAIL
SCALE: 1-1/2" = 1'-0"

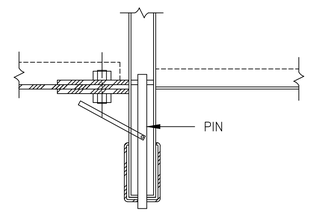

4 C16 C16 PIN DETAIL
SCALE: 1-1/2" = 1'-0"

IF THIS SHEET IS LESS THAN 24X36
REDUCE SHOWN SCALE ACCORDINGLY.

REGISTERED PROFESSIONAL ENGINEER
GARY E. GILL
36482
Exp.06/30/00
CIVIL
STATE OF CALIFORNIA

ART ANDERSON ASSOCIATES
148 FIRST STREET BREMERTON, WA 98337
(360) 479-5800 FAX 479-5805
65 MARION STREET SEATTLE, WA 98104
(206) 622-6221

kpff Consulting Engineers
1201 Third Avenue, Suite 900 Seattle, WA 98101
(206) 622-5822 Fax (206) 622-8130

VALLEJO FERRY TERMINAL DOCK
CITY OF VALLEJO, CA.

LIFT PLATFORM

DESIGNED	AKB
DRAWN	ELR
CHECKED	JRL/GEG
DATE	8-19-97
JOB NO	FVL03
SHT NO	C16

STRUCTURAL NOTES:

CODE REQUIREMENTS: All design and construction shall conform to the requirements of the Uniform Building Code, 1994 Edition.

DESIGN LOADS: In addition to the dead loads, the following were used for design:

Vertical Loads		
Gangway and Platforms	100	psf
Lateral Loads		
Gangway Longitudinal	58	k
Foundation Piling		
Vertical Skin Friction	1,200	psf

Earthquake and wind forces at abutment are resisted by cantilever piles extending into rock.

SEISMIC LOADS:

Earthquake design is based on the following:

Building: $V = F(Z\ I\ C_a R_w)\ W$ = Base Shear = 58 Kips

Where: Z = 0.40, Zone 4
I = 1.0
C = 0.73
R_w = 5
W = total dead load

WIND LOADS:

Wind design is based on the following:

1994 UBC: Exposure D, 80 mph — $P = C_e C_q Q_s I$

Where: C_e = See UBC Table 16G
C_q = See UBC Table 16H
Q_s = 16.4 psf
I = 1.0

SUBMITTALS: Shop drawings shall be submitted to the City prior to any fabrication or construction for all structural items including the following: concrete reinforcement, embedded steel items, structural steel, steel deck, shear stud layout, metal grating.

If the shop drawings differ from or add to the design of the structural drawings, they shall bear the seal and signature of the California State Registered Professional Engineer who is responsible for the design.
Design drawings and calculations or shop drawings, for the design and fabrication of items that are designed by others, such as the articulated platform and roof canopies shall bear the seal and signature of the California State Registered Professional Engineer who is responsible for the design and shall be submitted to the City for review prior to fabrication. Submitted calculations are for information only and will not be stamped or returned.

INSPECTION: Special inspection, per UBC Sections 1701 and 1703, shall be performed by an approved testing lab for reinforcement placement, concrete placement,pile placement, high strength bolt tightening, steel fabrication and erection, grouting, bolts installed in concrete, and welding. Augered pile holes shall be supervised by an approved testing lab or Soils Engineer.

SPECIAL CONDITIONS: Contractor shall verify all levels, dimensions and existing conditions in the field before proceeding. Contractor shall notify the Engineer of any discrepancies or field changes prior to installation or fabrication. In case of discrepancies between the existing conditions and the drawings, the Contractor shall obtain direction from the Engineer before proceeding. Dimensions noted as plus or minus () indicate unverified dimensions and are approximate. Notify Engineer immediately of conflicts or excessive variations from indicated dimensions. Noted dimensions take precedence over scaled dimensions – do not scale drawings.

Contractor shall be responsible for all safety precautions and the methods, techniques, sequences or procedures required to perform the work. Pile installation and drilling methods are to be determined by contractor.

SOILS: See the Soils Report by Jensen– Van Lienden Associates, Inc., dated June 28, 1996, for more complete information.

CONCRETE: Concrete work shall conform to all requirements of Chapter 19 of the Uniform Building Code. Concrete strengths shall be verified by standard 28–day cylinder tests, unless approved otherwise. Concrete mixes shall have a compressive strength of 4,000 psi at 28 days.

CONCRETE: The Contractor shall submit concrete mix designs for approval a minimum of two weeks prior to placing any concrete. The mix design shall be in conformance with UBC 1905. The submittal shall indicate where each concrete mix is to be used on the project, as well as the maximum aggregate size of each mix. Maximum aggregate size shall conform to the specifications.

ADMIXTURES: Water–reducing admixtures may be incorporated in concrete mix designs, but shall conform to ASTM C–494, and be used in strict accordance with the manufacturer's recommendations. $CaCl_2$ or other water–soluble chloride admixtures shall not be used.

WATER/CEMENT RATIO: Water/cement ratio shall be measured by weight and shall be based on the total cementitious material. Water/cement ratio shall be determined by the supplier based on strength requirements and shall not exceed the maximum water/cement ratio if shown above.

SLUMP: Field measured slump shall conform to the submitted concrete mix design. Tolerance of slump shall conform to ASTM C–94.

AIR CONTENT: An air–entraining agent conforming to ASTM C–260 shall be used in all concrete mixes for work which is exposed to weather. The amount of entrained air shall be 5% ± 1½% by volume. The amount of entrained air shall be measured in the field at the discharge end of the placing hose.

CURING: If the air temperature will exceed 75 degrees F. within 48 hours of placing concrete, a moist cure shall be applied to the concrete for a period of 36 hours after finishing concrete surfaces. Refer to the project specifications for curing requirements.

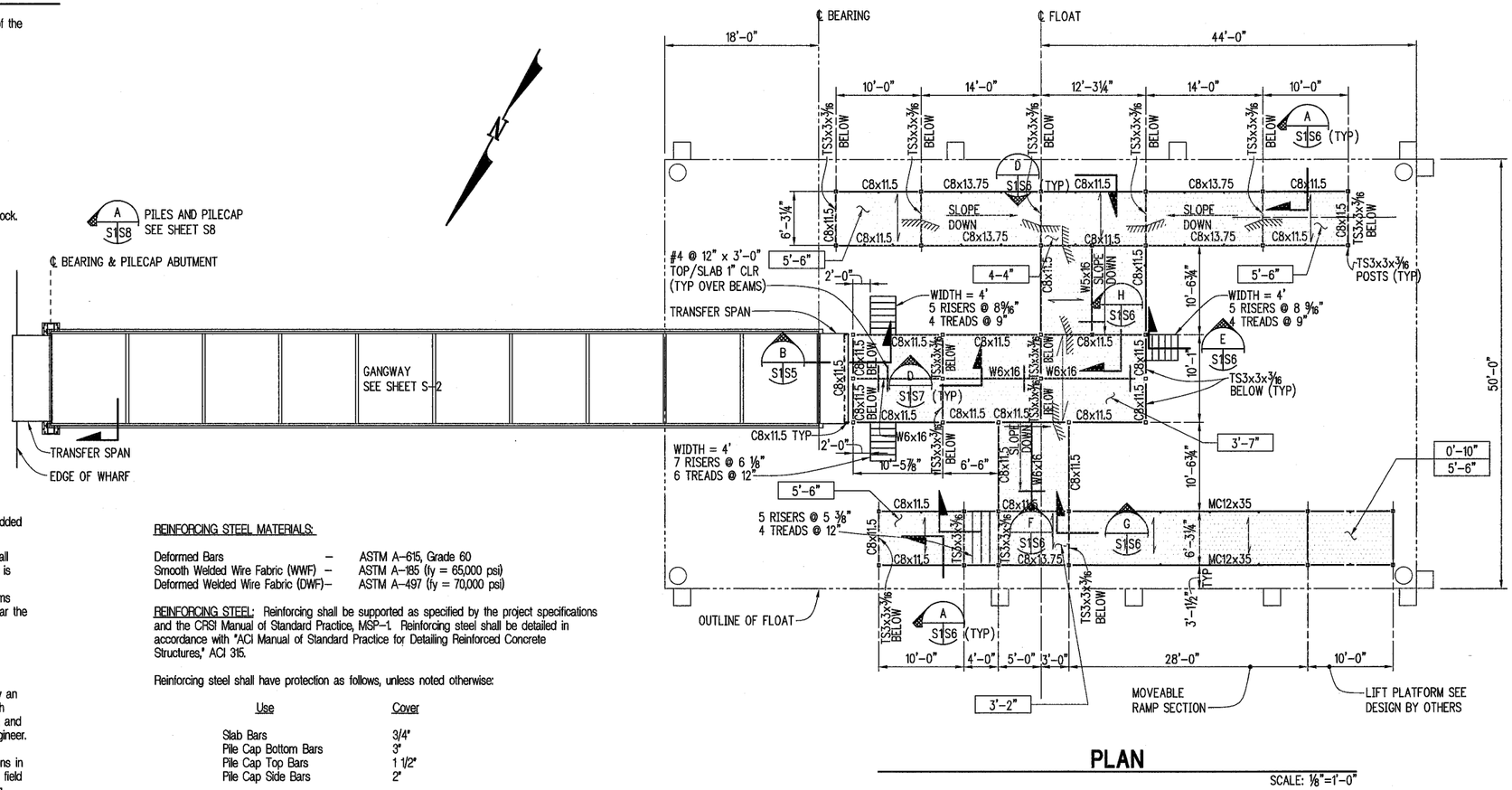

PLAN

SCALE: 1/8"=1'-0"

REINFORCING STEEL MATERIALS:

Deformed Bars	–	ASTM A–615, Grade 60
Smooth Welded Wire Fabric (WWF)	–	ASTM A–185 (fy = 65,000 psi)
Deformed Welded Wire Fabric (DWF)	–	ASTM A–497 (fy = 70,000 psi)

REINFORCING STEEL: Reinforcing shall be supported as specified by the project specifications and the CRSI Manual of Standard Practice, MSP–1. Reinforcing steel shall be detailed in accordance with "ACI Manual of Standard Practice for Detailing Reinforced Concrete Structures," ACI 315.

Reinforcing steel shall have protection as follows, unless noted otherwise:

Use	Cover
Slab Bars	3/4"
Pile Cap Bottom Bars	3"
Pile Cap Top Bars	1 1/2"
Pile Cap Side Bars	2"

NONSHRINK GROUT: Base plate grout shall be nonshrink type with minimum f'c = 8,000 psi. All other nonshrink grout shall have minimum f'c = 5,000 psi.

STEEL REFERENCE SPECIFICATIONS:

Structural Steel	–	AISC – Specification for Structural Steel for Buildings – 9th Edition
High Strength Bolts	–	Specification for Joints using ASTM A–325 or A–490 Bolts, 1988 Edition
Welding	–	AWS D1.1 AWS prequalified joint details
Welder Certification	–	American Welding Society (AWS)
Steel Decking	–	Steel Deck Institute, AISI–Specifications for the Design of Cold–Formed Steel Structural Members

STEEL MATERIALS:

Structural Steel, Piles	–	ASTM A–36
Connection material, embedded items channels, angles, base plates, and misc. steel	–	ASTM A–36
Structural Tubes	–	ASTM A–500, Grade B
Steel Pipe	–	ASTM A–53, Grade B
Structural Bolts	–	ASTM A–325–N
Machine Bolts	–	ASTM A–307
Anchor Bolts	–	ASTM A–325
Threaded Rods	–	ASTM A–36
Welding Electrodes	–	E70XX
Headed Shear Studs	–	ASTM A–108

STRUCTURAL STEEL: Structural steel design, fabrication and erection shall conform to the requirements of Chapter 22 of the Uniform Building Code. All members are to be erected with natural mill camber or induced camber up, unless otherwise noted on the plans. Substitution of member sizes or steel grade will not be allowed without prior approval of the engineer.

Bolted connections are to be of high strength ASTM A–325 or A–307 bolts as shown. A minimum of two bolts is required for all beam connections. The minimum weld size shall be 3/16 inch, unless noted otherwise. Connections are to be as shown on these drawings. Alternative connections will require prior approval of the Engineer.

All steel, connection plates, bolts, nuts, washers and railings shall be hot–dipped galvanized after fabrication in compliance with ASTM A–123. Gangway truss shall be flame–spray galvanized after complete fabrication. All field welds exposed to weather shall be coated with brush applied zinc–rich paint complying with ASTM A–780 (Galvacon or equivalent).

The Contractor shall be responsible for all erection aids and joint preparations that include, but are not limited to, erection angles, lift holes and other aids, welding procedures, required root openings, roof face dimensions, groove angles, backing bars, copes, surface roughness values and unequal parts.

WELDING: All welding shall be in conformance with AISC and AWS Standards and shall be performed by AWS certified welders using E70XX electrodes. Only prequalified welds, as defined by AWSI, shall be used. Shop drawings shall show all welding with AWS A24 symbols. Welds shown on the drawings are minimum sizes. Increase weld size to AWS minimum sizes based on plate thickness. Minimum welding shall be 3/16–inch. The welds shown are for the final connections. Field weld arrows are shown any where a field weld is required by the structural design. The Contractor is responsible for determining if a weld should be shop– or field–welded in order to facilitate the structural steel erection.

METAL DECK: Steel deck shall conform to ASTM A–446 Grade E minimum and have a minimum fy=38,000 psi. The galvanized coating shall conform to ASTM A–525, or G90.

Deck Supplier shall verify deck gages and capacities based on actual deck layout and span conditions. Deviations in deck gages from those shown shall be submitted to the architect along with a valid ICBO report for approval prior to shop detailing. Where spans exceed the manufacturers recommended limit, Temporary shoring will be required during construction.

Deck welding shall be in accordance with AWS D1.3, "Specification for Welding Sheet Steel in Structures." Welders shall be qualified by WABO Light Gauge Certification.

Contractor shall provide closure plates, flashing and all miscellaneous light gage metal shapes necessary to complete the work. The minimum end lap shall be 2 inches centered over supports. The minimum bearing required shall be 2 inches.

HEADED SHEAR STUDS AND DEFORMED BAR ANCHORS: All shear studs shall be 1/2–inch diameter headed studs. Stud lengths after weld shall be as shown on the drawings. Deformed bar anchors shall be of the size and length shown on the drawings. All studs and deformed bar anchors shall be automatically end welded in shop or field with equipment recommended by manufacturer.

LEGEND

- SURFACE – SLOPE DOWN
- SURFACE – SLOPE UP
- A / S–1 S–1 — STANDARD SECTION CUTS (SEE SHEET S6)
- DIRECTION OF SPAN
- 100'-0" — TOP OF PLATFORM DIM ABOVE CONC – DECK OF FLOAT
- INDICATES 3x3 TS POST

ART ANDERSON ASSOCIATES
140 FIRST STREET BREMERTON, WA 98337 (360) 479-8000 FAX 479-8005
95 MARION STREET SEATTLE, WA 98104 (206) 622-0221

kpff Consulting Engineers
1201 Third Avenue, Suite 900 Seattle, WA 98101
(206) 622-5522 Fax (206) 622-8130

VALLEJO FERRY TERMINAL DOCK
CITY OF VALLEJO, CA.

STRUCTURAL FRAMING PLAN & NOTES

DESIGNED	GN
DRAWN	DLR
CHECKED	GLS
DATE	8–19–97
JOB NO	96204
SHT NO	S1

JOB #	JOB NAME	UPDATED BY	PLOT SCALE	PLOT SET UP	P SPACE	VIEW	UCS	ORIGINAL TO	DISCARD OLD	# PRINTS	PRINT:
96204	VALLEJO	BR	1=1	6S–FULL	NO	PLOT	WORLD	BR	YES	1	BF

FILE PATH & NAME: T:\1STRUC\VALLEJO\V-FRPLN1.DWG
PLOTTED DATE & TIME: AUG. 15, 1997 10:31:37 AM
LFS: VALTB, VAL2X96,

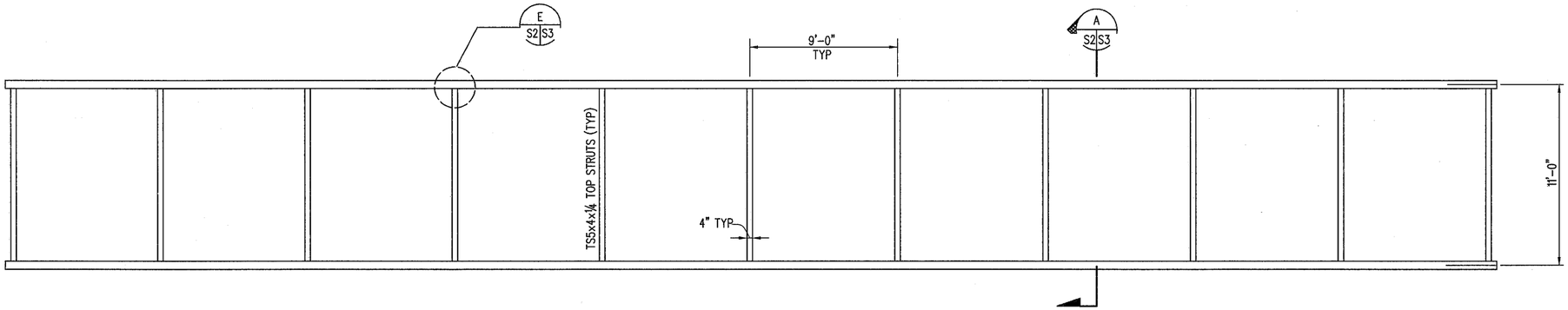

TOP CHORD PLAN

¼"=1'-0"

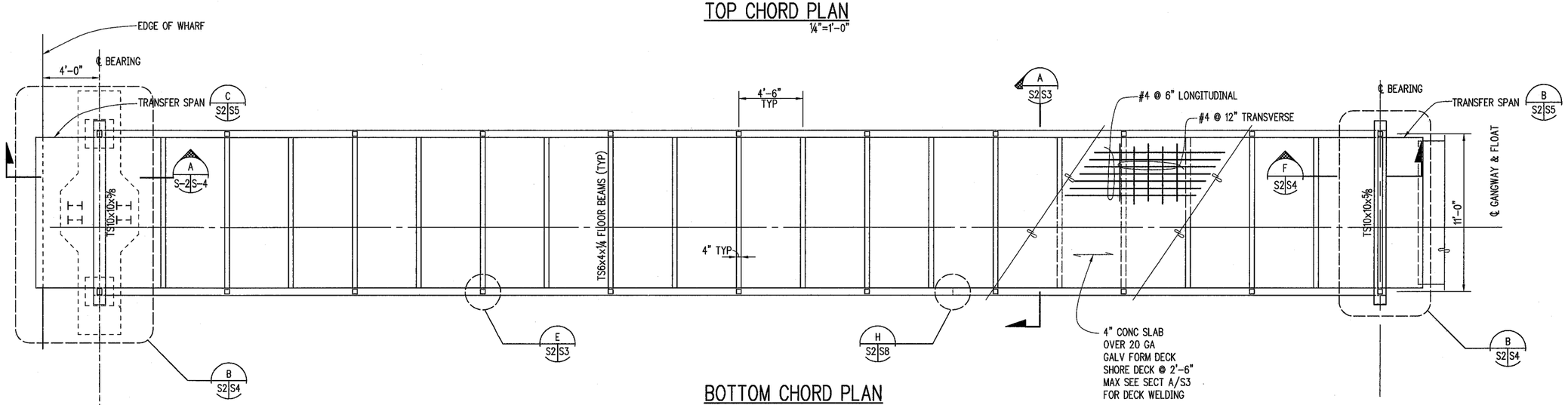

BOTTOM CHORD PLAN

¼"=1'-0"

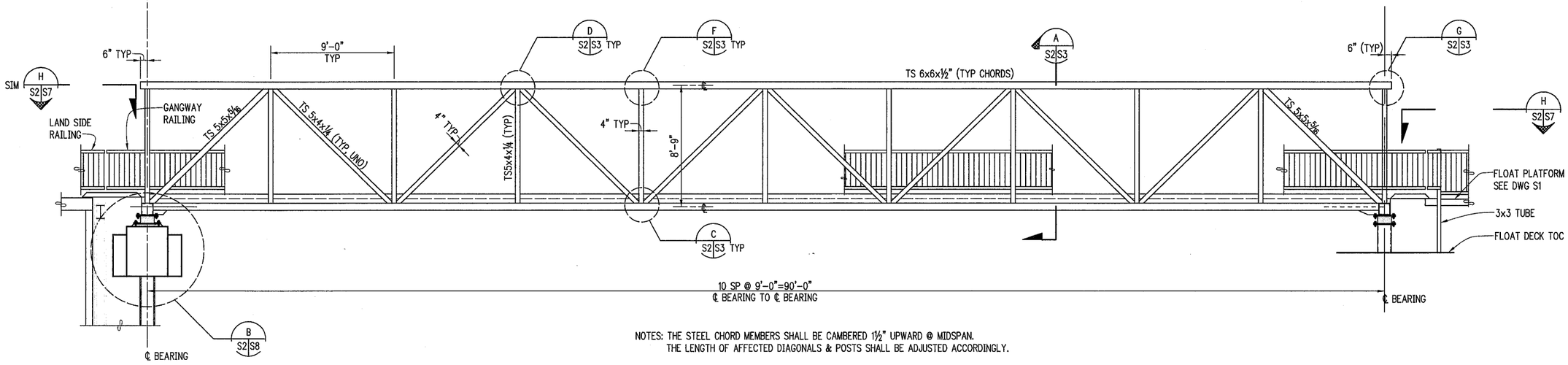

NOTES: THE STEEL CHORD MEMBERS SHALL BE CAMBERED 1½" UPWARD @ MIDSPAN.
THE LENGTH OF AFFECTED DIAGONALS & POSTS SHALL BE ADJUSTED ACCORDINGLY.

GANGWAY ELEVATION

¼"=1'-0"

ART ANDERSON
A S S O C I A T E S
140 FIRST STREET BREMERTON, WA 98337
(360) 479-8900 FAX 479-8905
65 MARION STREET SEATTLE, WA 98104
(206) 622-0221

kpff Consulting Engineers
1201 Third Avenue, Suite 900 Seattle, WA 98101
(206) 622-5822 Fax (206) 622-8130

VALLEJO FERRY TERMINAL DOCK
CITY OF VALLEJO, CA.

DESIGNED	GN
DRAWN	DLR
CHECKED	GLS
DATE	8-19-97
JOB NO	96204
SHT NO	S2

	UCS	ORIGINAL TO	DISCARD OLD	# PRINTS	PRINTS TO
		BR	YES	1	BR

	VIEW	P SPACE	PLOT SET UP	PLOT SCALE	UPDATED BY	PLOTTED DATE & TIME
	PLOT	NO	6S-FULL	1/4"=1'	BR	AUG. 15, 1997 10:32:56 AM

FILE PATH & NAME	JOB NAME	JOB #
T:\STRUC\VALLEJO\V-GWPLN1.DWG	VALLEJO	96204

XREFS: VALTB,

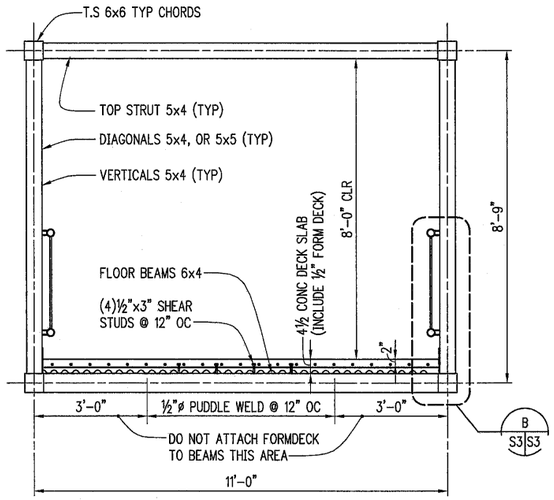

A S2 S3 **GANGWAY CROSSECTION**
SCALE: ½"=1'-0"

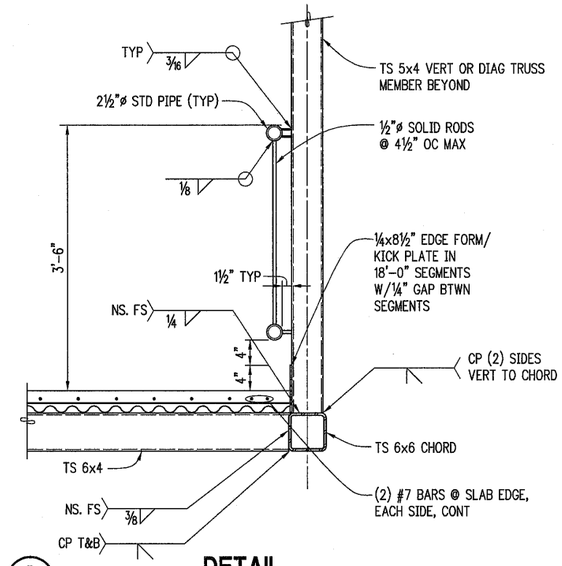

B S3 S3 **DETAIL**
SCALE: 1"=1'-0"

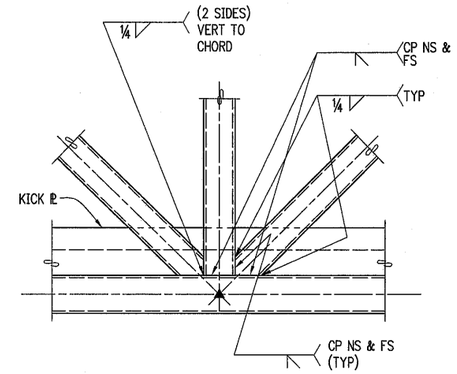

C S2 S3 **DETAIL**
SCALE: 1"=1'-0"

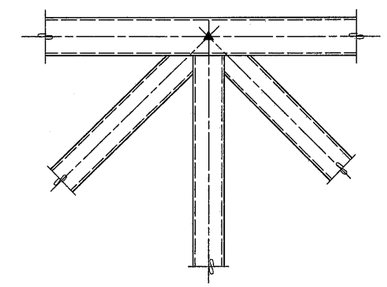

NOTE: SEE DETAIL C FOR WELDING

D S2 S3 **DETAIL**
SCALE: 1"=1'-0"

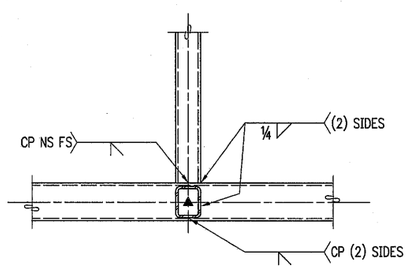

E S2 S3 **DETAIL**
SCALE: 1"=1'-0"

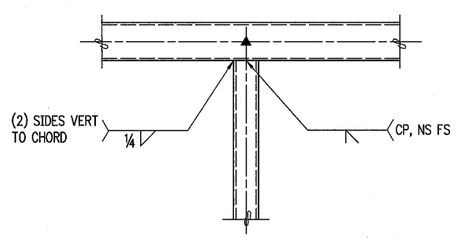

F S2 S3 **DETAIL**
SCALE: 1"=1'-0"

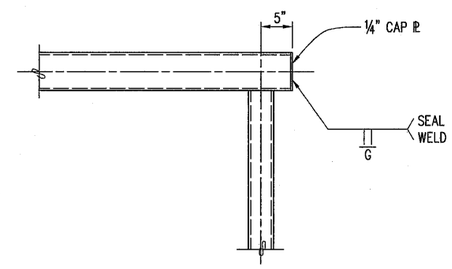

G S2 S3 **DETAIL**
SCALE: 1"=1'-0"

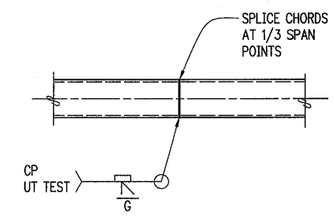

H S2 S3 **CHORD SPLICE DETAIL**
SCALE: 1"=1'-0"

ART ANDERSON ASSOCIATES
140 FIRST STREET BREMERTON, WA 98337 (360) 479-8800 FAX 479-8806
66 MARION STREET SEATTLE, WA 98104 (206) 622-4221
kpff Consulting Engineers
1201 Third Avenue, Suite 900 Seattle, WA 98101 (206) 622-5822 Fax (206) 622-8130

VALLEJO FERRY TERMINAL DOCK
CITY OF VALLEJO, CA.

GANGWAY DETAILS

DESIGNED	GN
DRAWN	DLR
CHECKED	GLS
DATE	8-19-97
JOB NO	96204
SHT NO	S3

PRINT:	BR
# PRINTS	1
OLD	NO
DISCARD	NO
ORIGINAL TO	BR
UCS	
VIEW	PLOT
P SPACE	NO
PLOT SET UP	6S-FULL
PLOT SCALE	1"=1'-0"
UPDATED BY	BR
PLOTTED DATE & TIME	AUG. 15, 1997 10:39:06 AM
FILE PATH & NAME	T:\1STRUC\VALLEJO\V-GWDTL1.DWG
JOB NAME	VALLEJO
JOB #	96204
XREFS:	VALTB,

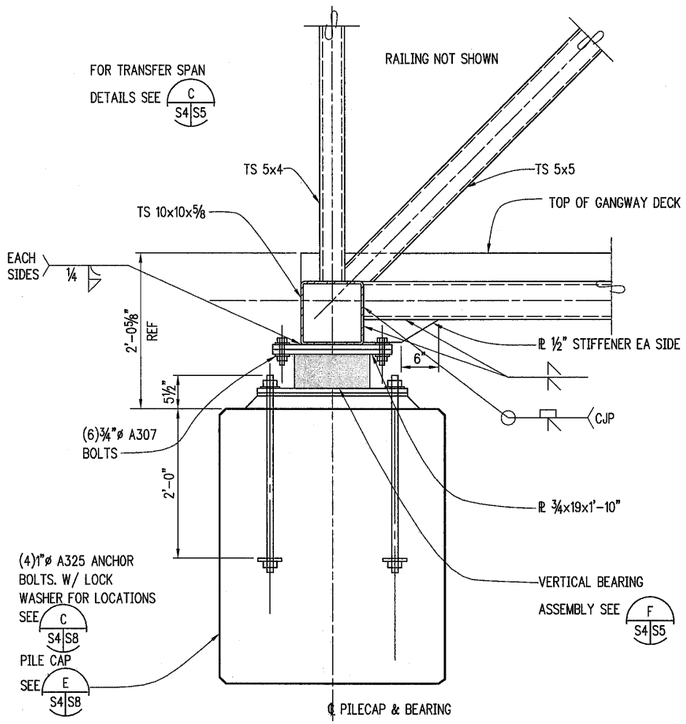

A VERTICAL BEARING AT PILE
S2|S4|S4
SCALE: 1"=1'-0"

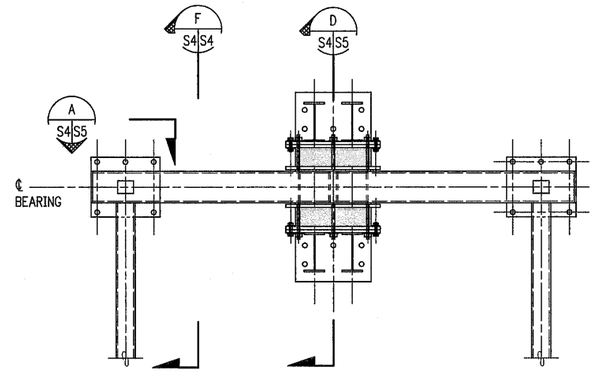

FLOAT END BEARING

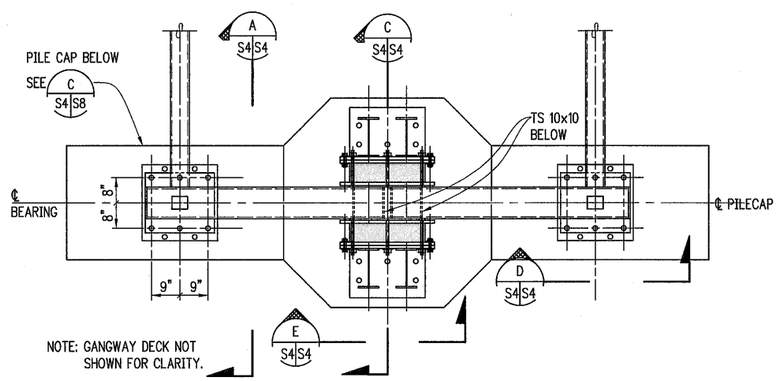

SHORE END BEARING

B LONGITUDINAL BEARING DETAILS
S2|S4
SCALE: 1/2"=1'-0"

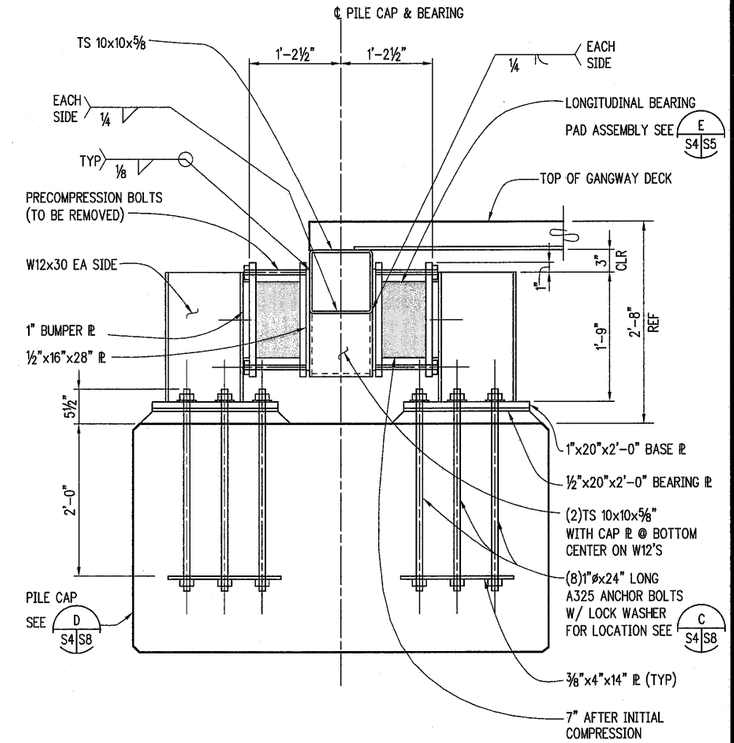

C LONGITUDINAL BEARING DETAIL AT PILE
S4|S4
SCALE: 1"=1'-0"

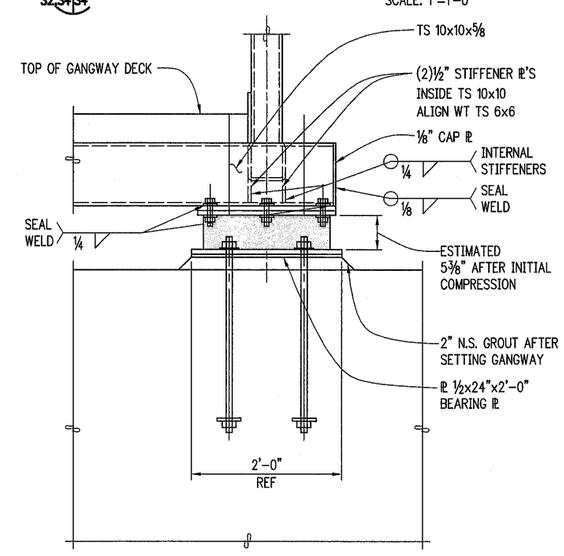

D VERTICAL BEARING AT PILE
S4|S4
SCALE: 1"=1'-0"

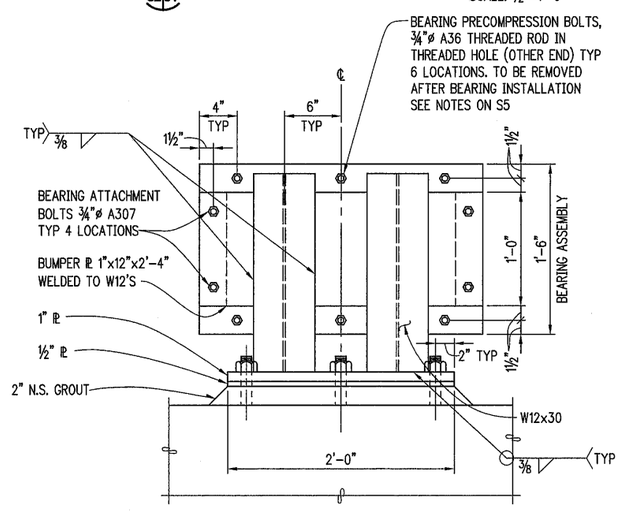

E LONGITUDINAL BEARING DETAIL
S4|S4
SCALE: 1 1/2"=1'-0"

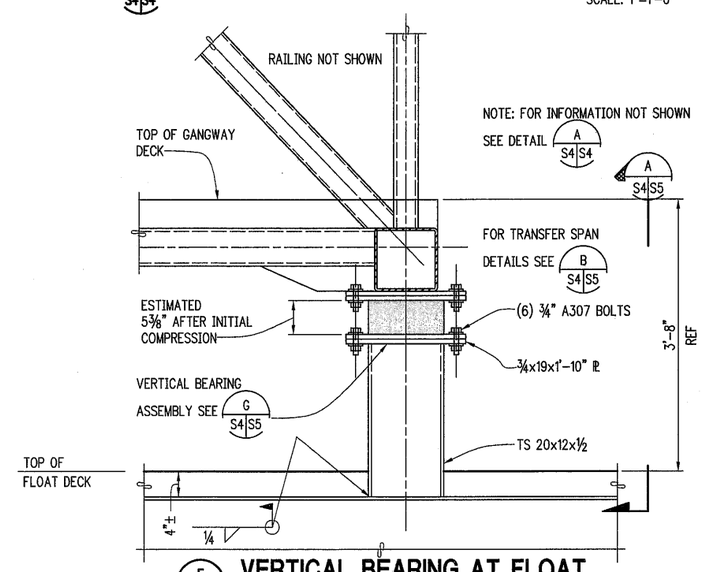

F VERTICAL BEARING AT FLOAT
S2|S4|S4
SCALE: 1"=1'-0"

ART ANDERSON ASSOCIATES
148 FIRST STREET BREMERTON, WA 98337 (360) 479-6000 FAX 479-6006
65 MARION STREET SEATTLE, WA 98104 (206) 622-5221
kpff Consulting Engineers
1201 Third Avenue, Suite 900 Seattle, WA 98101 (206) 622-3822 Fax (206) 622-9130

VALLEJO FERRY TERMINAL DOCK
CITY OF VALLEJO, CA.

GANGWAY SUPPORT DETAILS

DESIGNED	GN
DRAWN	DLR
CHECKED	GLS
DATE	8-19-97
JOB NO	96204
SHT NO	S4

PLOTTED DATE & TIME	UCS	VIEW	P SPACE	PLOT SET UP	PLOT SCALE	UPDATED BY	DISCARD OLD # PRINTS	PRINTS
AUG. 15, 1997 12:17:09 PM	ORIGINAL TO BR	PLOT	NO	6S-FULL	1/2"=1'-0"	BR	YES	1

FILE PATH & NAME: T:\STRUC\VALLEJO\V-GWDTL2.DWG

JOB NAME: VALLEJO

JOB # 96204

FILE: VALTB.

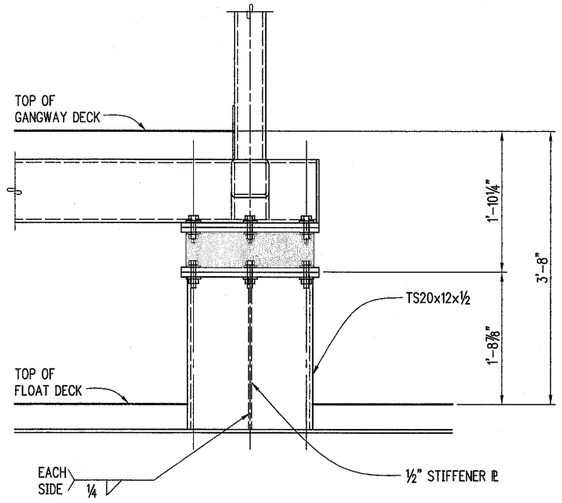

NOTE: FOR INFORMATION NOT SHOWN
SEE D/S4

A/S4|S5 VERTICAL BEARING DETAIL

SCALE: 1"=1'-0"

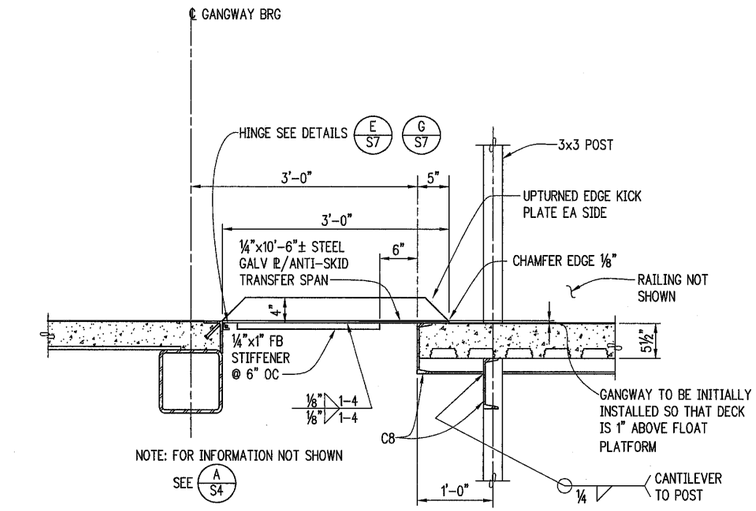

NOTE: FOR INFORMATION NOT SHOWN
SEE A/S4

B/S5|S5 TRANSFER SPAN @ FLOAT END

SCALE: 1"=1'-0"

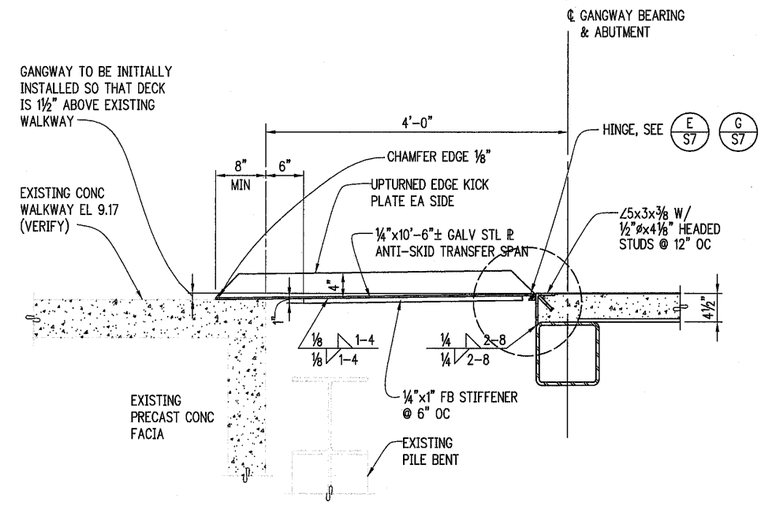

C/S5|S5 TRANSFER SPAN @ SHORE END

SCALE: 1"=1'-0"

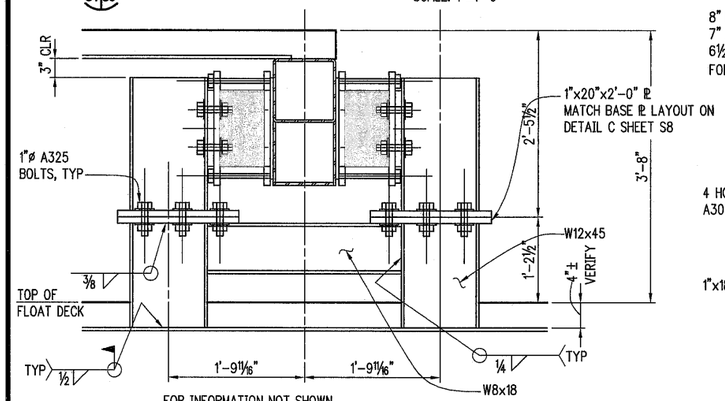

FOR INFORMATION NOT SHOWN
SEE C/S4

D/S4|S5 LONGITUDINAL BEARING DETAIL AT FLOAT

SCALE: 1"=1'-0"

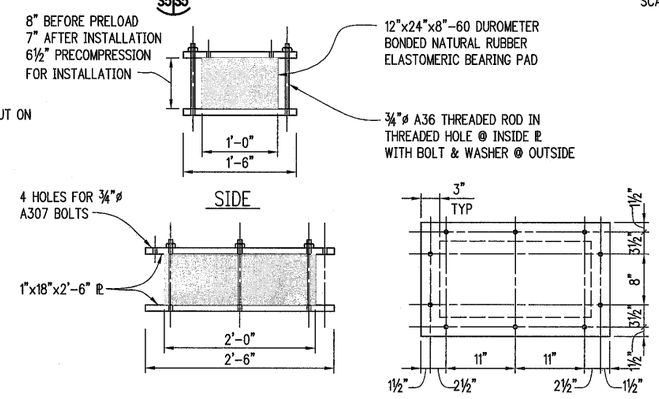

FRONT PLAN

E/S4|S5 LONGITUDINAL ELASTOMERIC BEARING

SCALE: 1"=1'-0"

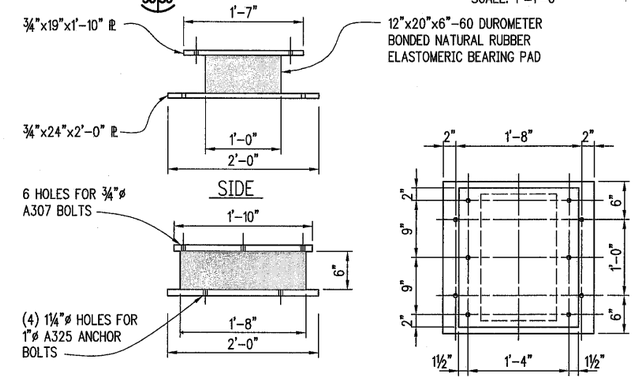

FRONT PLAN

F/S4|S5 VERTICAL ELASTOMERIC BEARING @ SHORE

SCALE: 1"=1'-0"

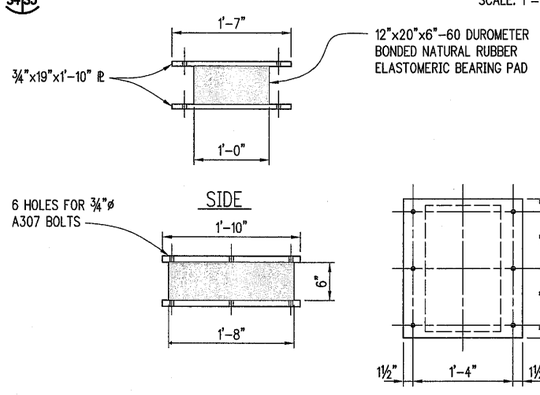

FRONT PLAN

G/S4|S5 VERTICAL ELASTOMERIC BEARING @ FLOAT

SCALE: 1"=1'-0"

BEARING NOTES:

1. ALL ELASTOMERIC BEARINGS SHALL BE PLAIN (UNREINFORCED) 60 DUROMETER BONDED NATURAL RUBBER ELASTOMER OF TEMPERATURE GRADE 3, AND SHALL CONFORM TO THE REQUIREMENTS OF A.A.S.H.T.O. STANDARD SPECIFICATIONS FOR HIGHWAYS AND BRIDGES (15th ED) DIVISION II, SECTION 18.2.
2. ELASTOMERIC PADS SHALL BE VULCANIZED TO TOP AND BOTTOM PLATES.
3. LONGITUDINAL BEARING PADS SHALL BE PRECOMPRESSED FOR INSTALLATION BY TIGHTENING NUTS ON TEMPORARY THREADED RODS TO ACHIEVE COMPRESSED DIMENSIONS SHOWN ABOVE.
4. AFTER INSTALLATION OF BEARINGS AND GANGWAY, RELEASE COMPRESSION IN RUBBER BEARING TO ACHIEVE UNIFORM CONTACT BETWEEN GANGWAY BEAM AND BUMPER PLATES.
5. RUBBER BEARINGS TO REMAIN COMPRESSED TO 7"±.
6. AFTER RELEASE OF COMPRESSION REMOVE THREADED RODS AND NUTS, AND RETAIN FOR FUTURE MAINTENANCE AND ADJUSTMENT.

ART ANDERSON ASSOCIATES
1420 FIRST STREET BREMERTON, WA 98337 (360) 479-9000 FAX 479-9005
66 MARION STREET SEATTLE, WA 98104 (206) 622-4023

kpff Consulting Engineers
1201 Third Avenue, Suite 900 Seattle, WA 98101
(206) 622-5822 Fax (206) 622-8130

VALLEJO FERRY TERMINAL DOCK
CITY OF VALLEJO, CA.

GANGWAY SUPPORT DETAILS

DESIGNED	GN
DRAWN	DLR
CHECKED	GLS
DATE	8-19-97
JOB NO	96204
SHT NO	S5

JOB #	JOB NAME	UPDATED BY	PLOT SCALE	PLOT SET UP	P SPACE	VIEW	UCS	ORIGINAL TO	DISCARD OLD	# PRINTS	PRINT:
96204	VALLEJO	BR	1"=1'-0"	6S-FULL	NO	PLOT		BR	YES	1	BF

FILE PATH & NAME: T:\1STRUC\VALLEJO\V-GWDTL3.DWG
PLOTTED DATE & TIME: AUG. 15, 1997 10:46:14 AM
FILE: VALTB.

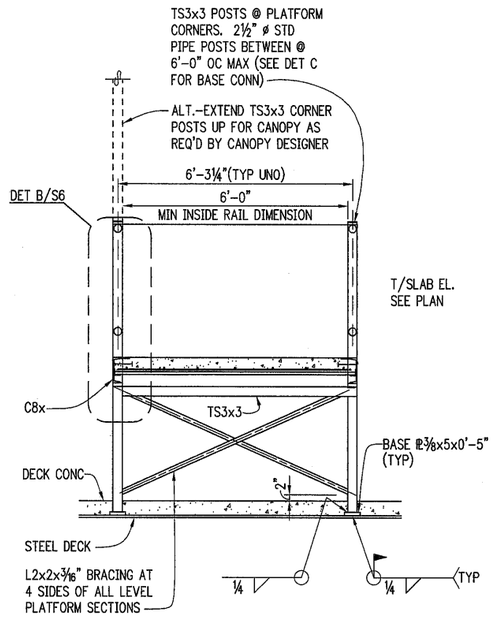

A S1|S6 **WALKWAY CROSS SECTION**
SCALE: ½"=1'-0"

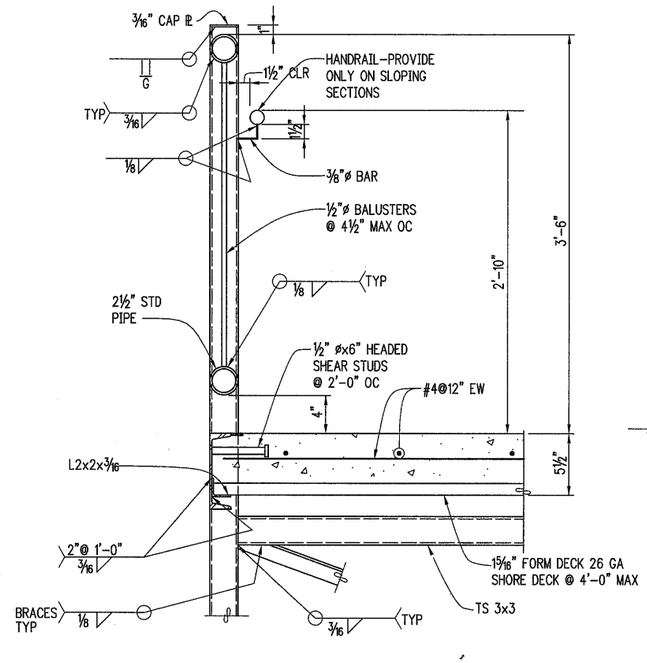

B S6|S6 **DETAIL**
SCALE: 1½"=1'-0"

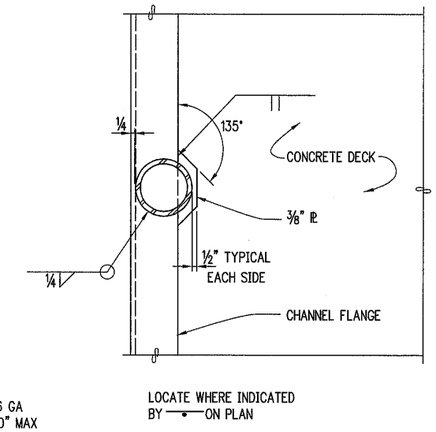

C S6|S6 **GUARDRAIL PIPE POST BASE**
SCALE: 3"=1'-0"

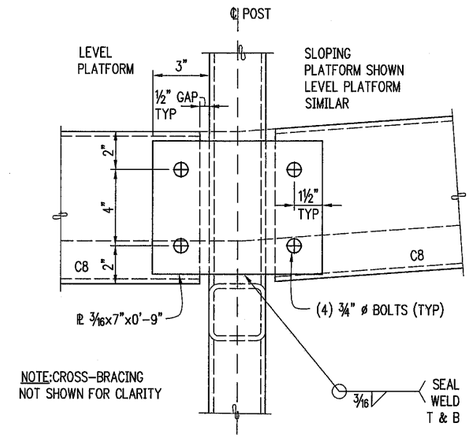

D S1|S6 **CONNECTION DETAIL**
SCALE: 3"=1'-0"

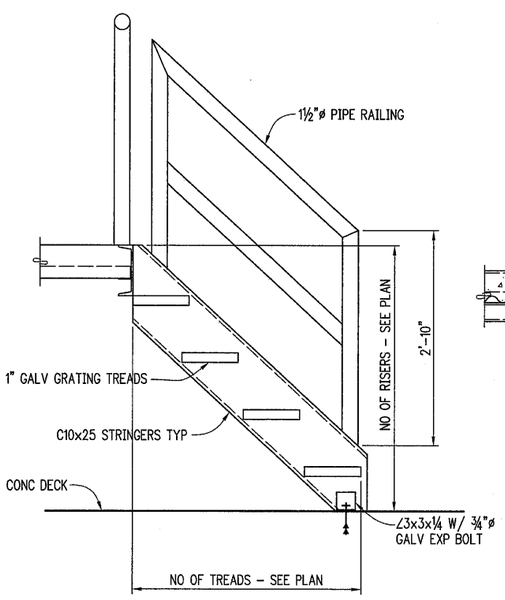

E S1|S6 **TYP. SERVICE STAIR SECTION**
SCALE: 1"=1'-0"

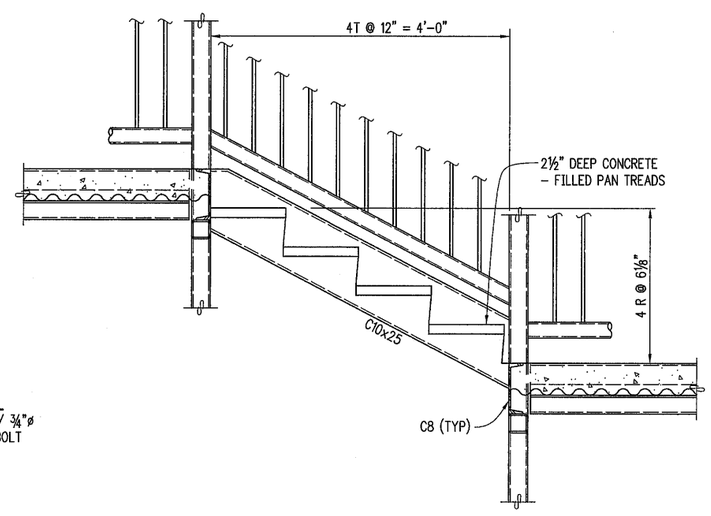

F S1|S6 **STAIR DETAIL**
SCALE: 1"=1'-0"

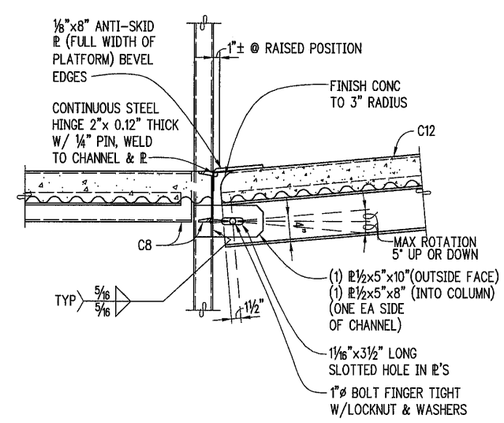

G S1|S6 **HINGE DETAIL**
SCALE: 1"=1'-0"

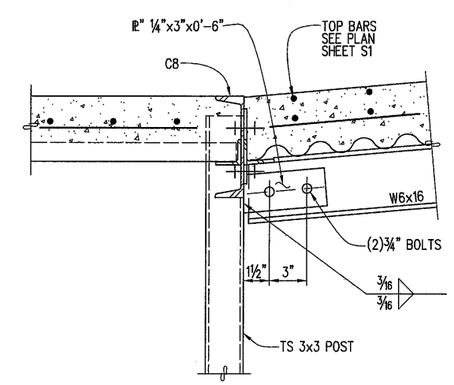

NOTE: CROSS-BRACING NOT SHOWN FOR CLARITY.

H S1|S6 **DETAIL**
NO SCALE

DATE & TIME	UPDATED BY	PLOT SCALE	PLOT SET UP	P SPACE	VIEW	UCS	ORIGINAL TO	DISCARD OLD	# PRINTS	PRINT:
97 10:52:14 AM	BR	1"=1'-0"	6S-FULL	NO	PLOT		BR	YES	1	BR

FILE PATH & NAME: T:\STRUC\VALLEJO\V-BRDTL1.DWG
PLOTTED DATE & TIME: AUG. 15, 1997 10:52:14 AM

JOB NAME: VALLEJO
JOB #: 96204
FS: VALTB.

ART ANDERSON ASSOCIATES
140 FIRST STREET BELLINGHAM, WA 98227 (360) 676-2600 FAX 676-2606
66 MARION STREET SEATTLE, WA 98104 (206) 622-6221

kpff Consulting Engineers
1201 Third Avenue, Suite 900 Seattle, WA 98101
(206) 622-5822 Fax (206) 622-8130

VALLEJO FERRY TERMINAL DOCK
CITY OF VALLEJO, CA.

WALKWAY DETAILS

DESIGNED	GN
DRAWN	DLR
CHECKED	GLS
DATE	8-19-97
JOB NO	96204
SHT NO	S6

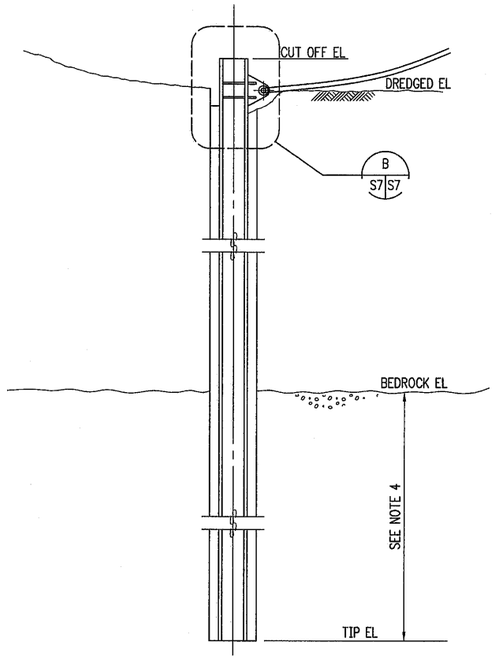

A S7 S7 STAKEPILE ELEVATION

NO SCALE

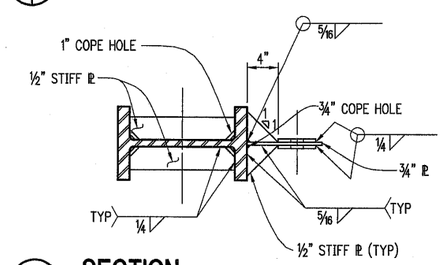

C S7 S7 SECTION

SCALE: 1"=1'-0"

TABLE 1								
PILE MARK	SECTION	HOLE DIA. (IN)	FLOOR ELEV. (FT)	BEDROCK ELEV (FT)	TIP ELEV. (FT)	CUT OFF ELEV. (FT)	PILE LENGTH (FT)
P1	W18x211	30	−10	−24	−44	−8.67	35.3
P2	W18x211	30	−10	−24	−44	−8.67	35.3
P3	W16X77	24	−10	−15	−35	−8.67	26.3
P4	W16X77	24	−10	−15	−35	−8.67	26.3
P5	HP14x117	24	−1	−15	−35	6.38	41.4
P6	HP14x117	24	−1	−15	−35	6.38	41.4
P7	HP14x117	24	−1	−15	−35	6.38	41.4
P8	HP14x117	24	−1	−15	−35	6.38	41.4

1. PILE MARK INDICATES PILE LOCATION – SEE DWG C11 FOR PILES P1–P4
   – SEE DWG A/58 FOR PILES P5–P8
2. ELEVATIONS LISTED ABOVE ARE ESTIMATES BASED ON THE SOILS REPORT.
3. PILE LENGTHS SHOULD BE ADJUSTED TO ACCOUNT FOR ACTUAL FIELD CONDITIONS.
4. ALL PILES ARE TO BE EMBEDDED A MINIMUM OF 20' INTO THE BEDROCK LAYER.
5. SEE ARCHITECTS SHEET C1 FOR PILE LOCATIONS.
6. FOR ABUTMENT PILE DETAILS (PILES P5–P8) SEE SHEET S8.

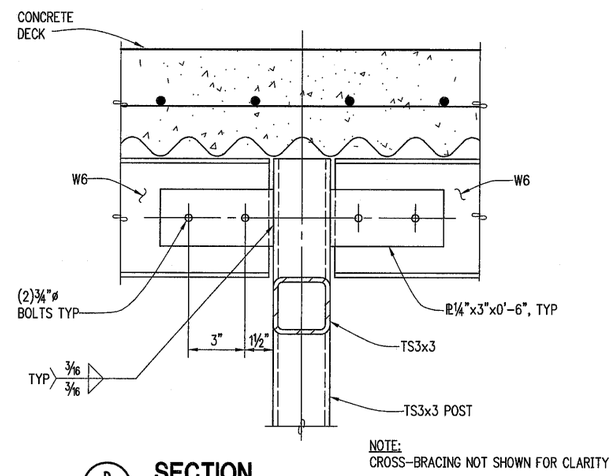

D S1 S7 SECTION

NO SCALE

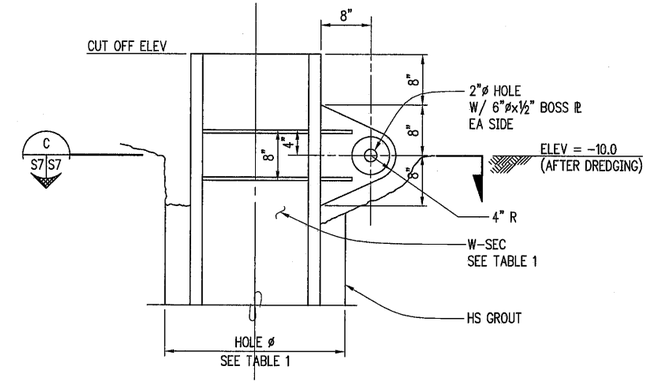

STAKEPILE DETAIL (P1–P4)

B S7 S7 SECTION

SCALE: 1"=1'-0"

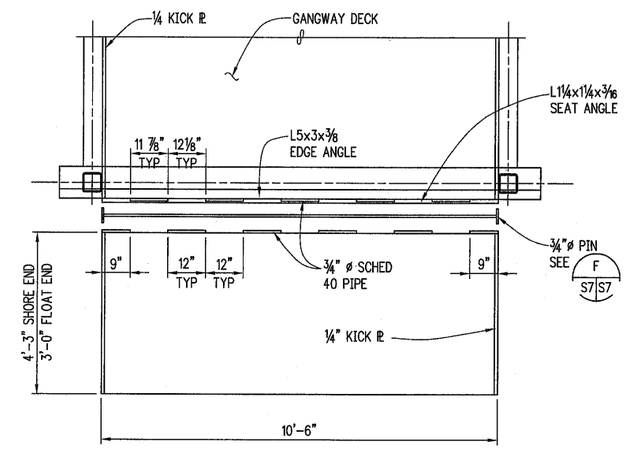

E S5 S7 TRANSFER SPAN HINGE

NO SCALE

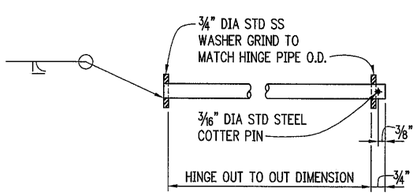

F S7 S7 HINGE PIN DETAIL

SCALE: 3"=1'-0"

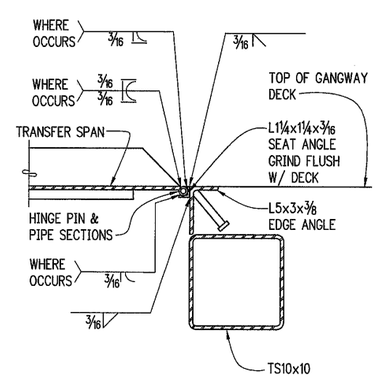

G S5 S7 HINGE DETAIL

NO SCALE

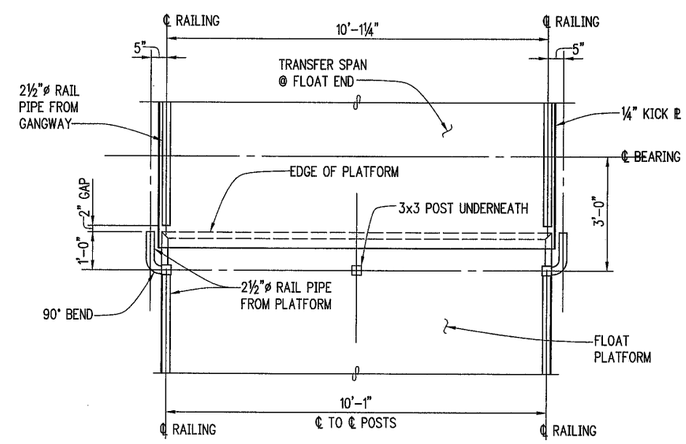

H S1 S7 SECTION

NO SCALE

TIME	UPDATED BY	PLOT SCALE	PLOT SET UP	P SPACE	VIEW	UCS	ORIGINAL TO	DISCARD OLD	# PRINTS	PRINTS
10:00 AM	BR	1"=1'-0"	6S-FULL	NO	PLOT		BR	YES	1	BR

PLOTTED DATE & TIME: AUG. 15, 1997 10:54:00 AM

FILE PATH & NAME: T:\STRUC\VALLEJO\V-GWDTL6.DWG

JOB NAME: VALLEJO

JOB #: 96204

XREFS: VALTB,

ART ANDERSON ASSOCIATES
940 FIRST STREET BREMERTON, WA 98337 (360) 479-8600 FAX 479-8606
66 MAYDON STREET SEATTLE, WA 98104 (206) 622-6221

kpff Consulting Engineers
1201 Third Avenue, Suite 900 Seattle, WA 98101
(206) 622-3822 Fax (206) 622-9130

VALLEJO FERRY TERMINAL DOCK
CITY OF VALLEJO, CA.

DETAILS

DESIGNED	GN
DRAWN	DLR
CHECKED	GLS
DATE	8-19-97
JOB NO	96204
SHT NO	S7

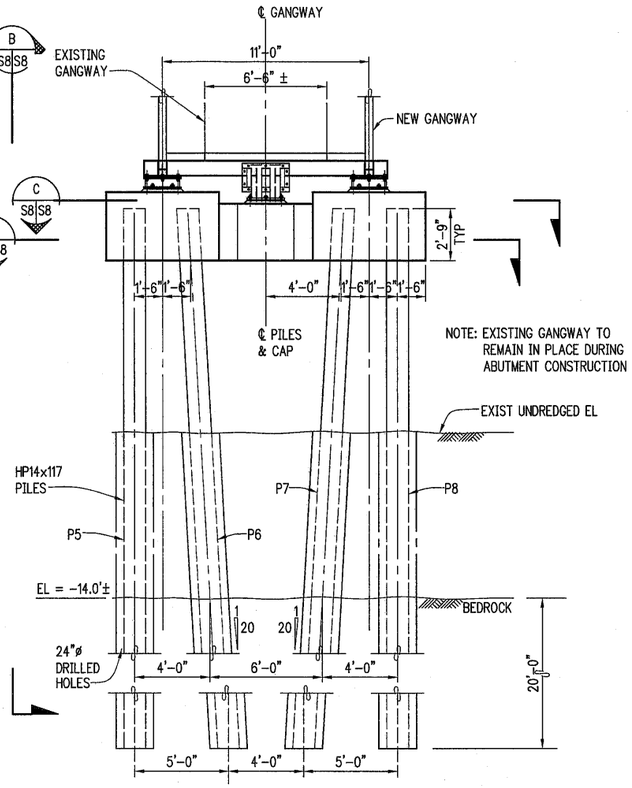

A S1|S8 **NEW SHORE END ABUTMENT**
SCALE: ¼"=1'-0"

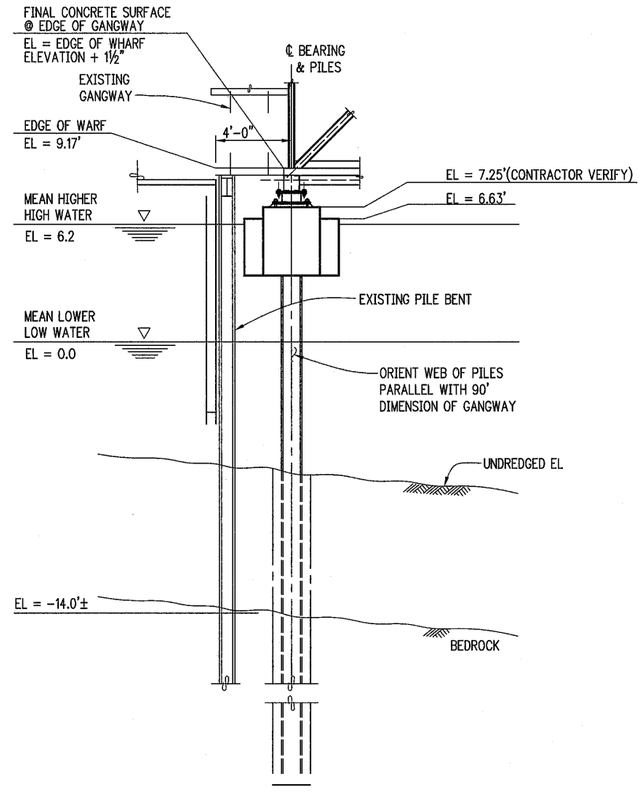

B S8|S8 **ELEVATION**
SCALE: ¼"=1'-0"

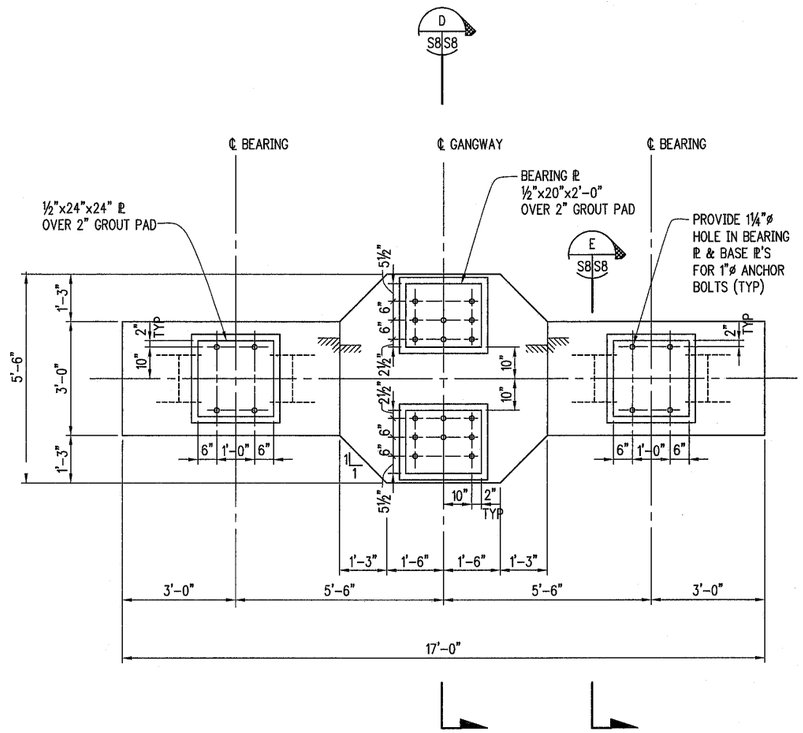

C S8|S8 **PLAN**
SCALE: ½"=1'-0"

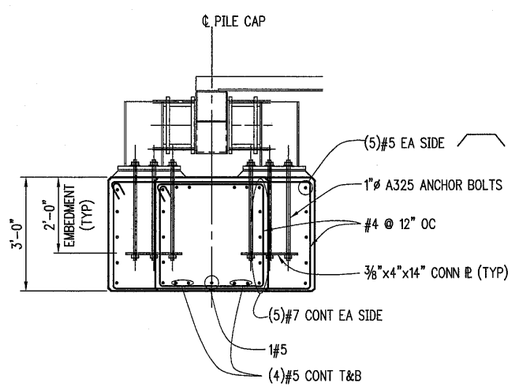

D S8|S8 **SECTION**
SCALE: ½"=1'-0"

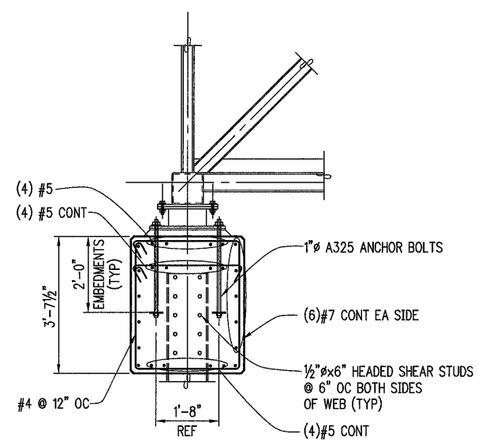

E S8|S8 **SECTION**
SCALE: ½"=1'-0"

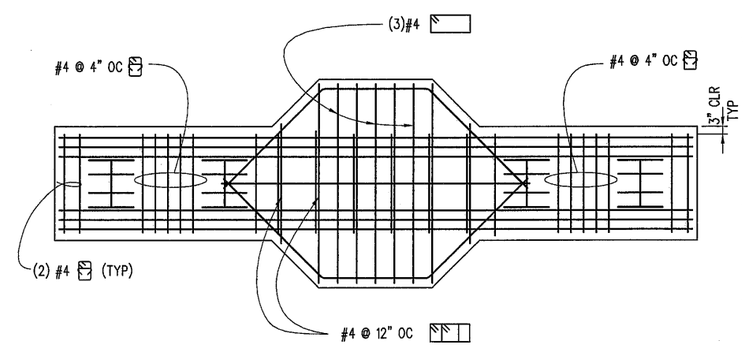

F S8|S8 **SECTION**
SCALE: ½"=1'-0"

ART ANDERSON ASSOCIATES
948 FIRST STREET BREMERTON, WA 98337 (360) 479-6800 FAX 479-6806
65 MARION STREET SEATTLE, WA 98104 (206) 622-6221
kpff Consulting Engineers
1201 Third Avenue, Suite 900 Seattle, WA 98101 (206) 622-3822 Fax (206) 622-5130

VALLEJO FERRY TERMINAL DOCK
CITY OF VALLEJO, CA.

GANGWAY SUPPORT DETAILS

DESIGNED	GN
DRAWN	DLR
CHECKED	GLS
DATE	8-19-97
JOB NO	96204
SHT NO	S8

JOB NAME	FILE PATH & NAME	PLOTTED DATE & TIME	DATE & TIME	UPDATED BY	PLOT SCALE	PLOT SET UP	P SPACE	VIEW	UCS	ORIGINAL TO	DISCARD OLD	# PRINTS	PRINT:
VALLEJO	T:\1STRUC\VALLEJO\V-GWDTL5.DWG	AUG. 15, 1997	97 10:55:09 AM	BR	1/2"=1'-0"	6S-FULL	NO	PLOT		BR	YES	1	BF

JOB # 96204 FS VAL TB.

ALL DRAWINGS REQUIRE FIELD/SITE VERIFICATION - INFORMATIONAL USE ONLY

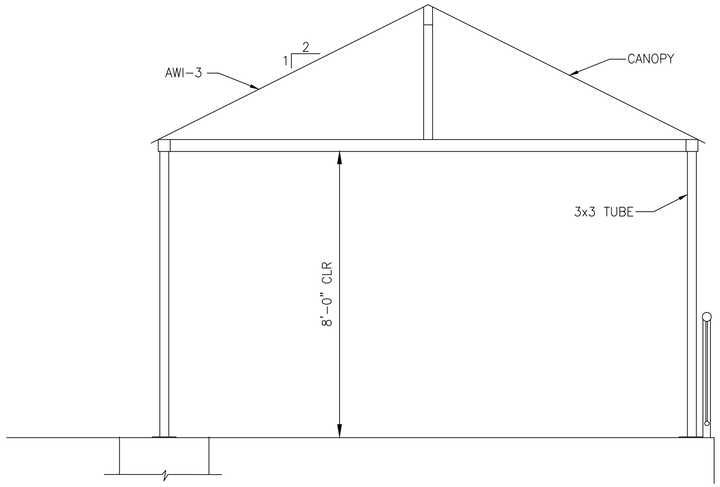

1 C1 C17 SECTION – SIDEWALK CANOPY
SCALE: 1/2" = 1'-0"

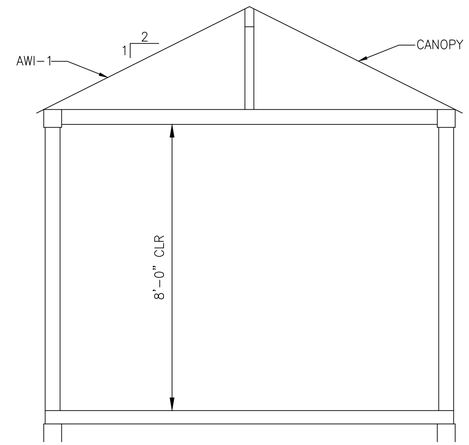

2 C1 C17 SECTION – GANGWAY CANOPY
SCALE: 1/2" = 1'-0"

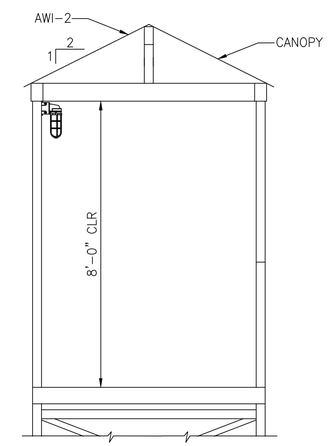

3 C1 C17 SECTION – RAMP CANOPY
SCALE: 1/2" = 1'-0"

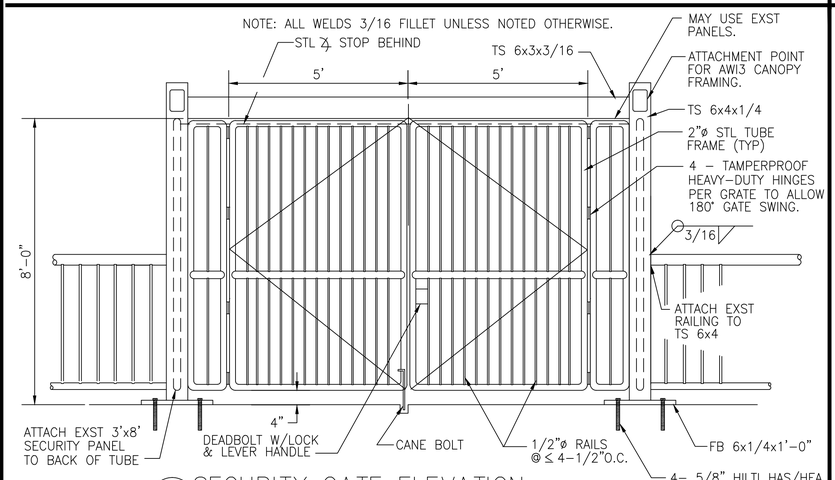

4 C1 C17 SECURITY GATE ELEVATION
SCALE: 1/2" = 1'-0"

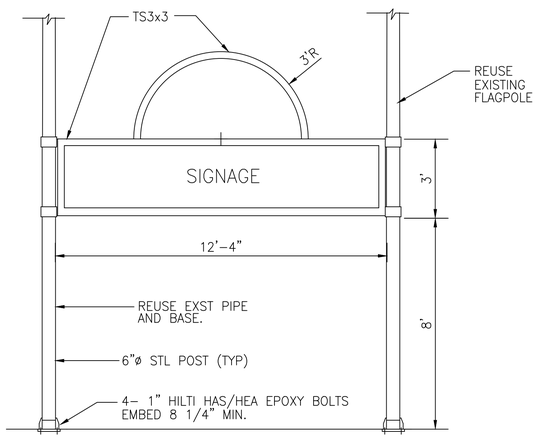

5 C1 C17 ENTRANCE ELEVATION
SCALE: 3/8" = 1'-0"

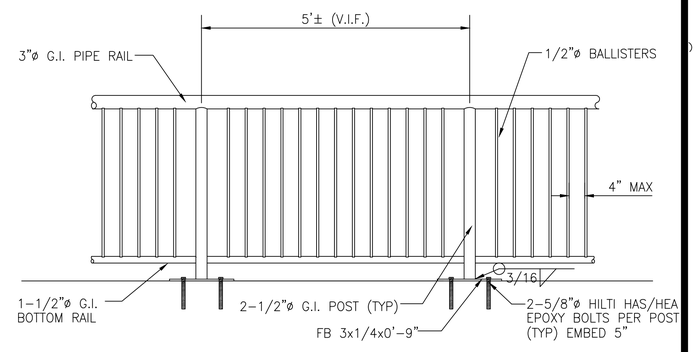

6 C17 C17 TYPICAL RAILING ELEVATION
SCALE: 3/4" = 1'-0"

IF THIS SHEET IS LESS THAN 24X36
REDUCE SHOWN SCALE ACCORDINGLY.

NOTE:
ALL CANOPIES SHOWN ON THIS SHEET ARE DESIGN-BUILD ITEMS. DRAWINGS ARE TO ILLUSTRATE PERFORMANCE REQUIREMENTS ONLY. SCHEME MAY BE MODIFIED PROVIDED ALL SPECIFIED REQUIREMENTS ARE MET.

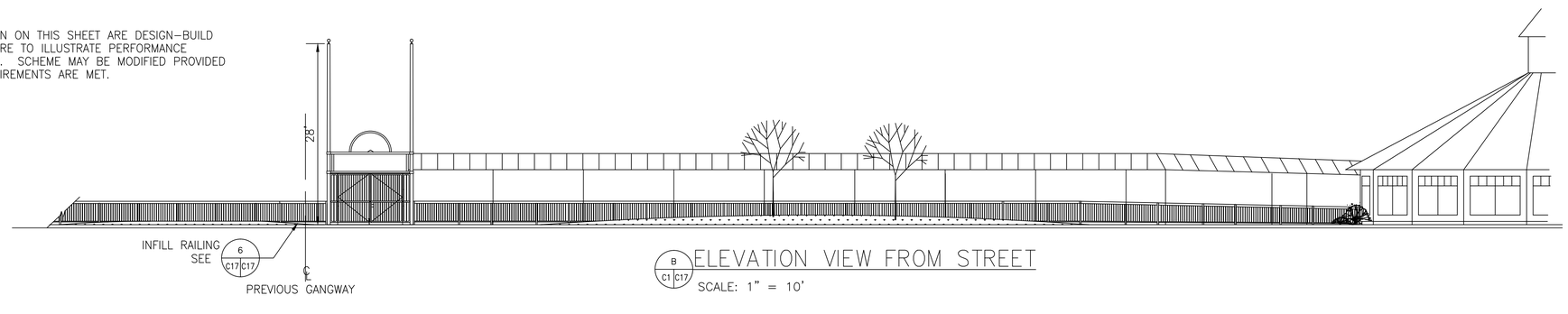

B C1 C17 ELEVATION VIEW FROM STREET
SCALE: 1" = 10'

REGISTERED PROFESSIONAL ENGINEER
GARY E. GILL
36482
Exp.06/30/00
CIVIL
STATE OF CALIFORNIA

ART ANDERSON ASSOCIATES
148 FIRST STREET BREMERTON, WA 98337
(360) 479-5800 FAX 479-5805
65 MARION STREET SEATTLE, WA 98104
(206) 622-6221

kpff Consulting Engineers
1201 Third Avenue, Suite 900 Seattle, WA 98101
(206) 622-5822 Fax (206) 622-8130

VALLEJO FERRY TERMINAL DOCK
CITY OF VALLEJO, CA.

CANOPY AND RAILING DETAILS

DESIGNED	JRL
DRAWN	ELR
CHECKED	JRL/GEG
DATE	8-19-97
JOB NO	FVL03
SHT NO	C17

ALL DRAWINGS REQUIRE FIELD/SITE VERIFICATION - INFORMATIONAL USE ONLY

GENERAL NOTES

1. SEE SHEET E2 FOR FLAG NOTES.
2. THE ELECTRICAL INSTALLATION SHALL COMPLY WITH NFPA 70, THE NATIONAL ELECTRICAL CODE AND ALL APPLICABLE STATE AND LOCAL CODES. THE ELECTRICAL INSTALLATION ON THE GANGWAY, FLOAT, AND RAMPS SHALL ALSO COMPLY WITH NFPA 303, FIRE PROTECTION STANDARD FOR MARINAS AND BOAT YARDS.
3. WIRING SHALL BE INSULATED COPPER CONDUCTORS IN GALV RIDGID STEEL CONDUIT OR IN SCHED 80 RIGID NON-METALLIC CONDUIT.
4. COLOR CODE WIRING AS FOLLOWS:

208Y/120V SYSTEM

ØA	ØB	ØC	NEUTRAL	GROUND
BLACK	RED	BLUE	WHITE	GREEN, INSULATED

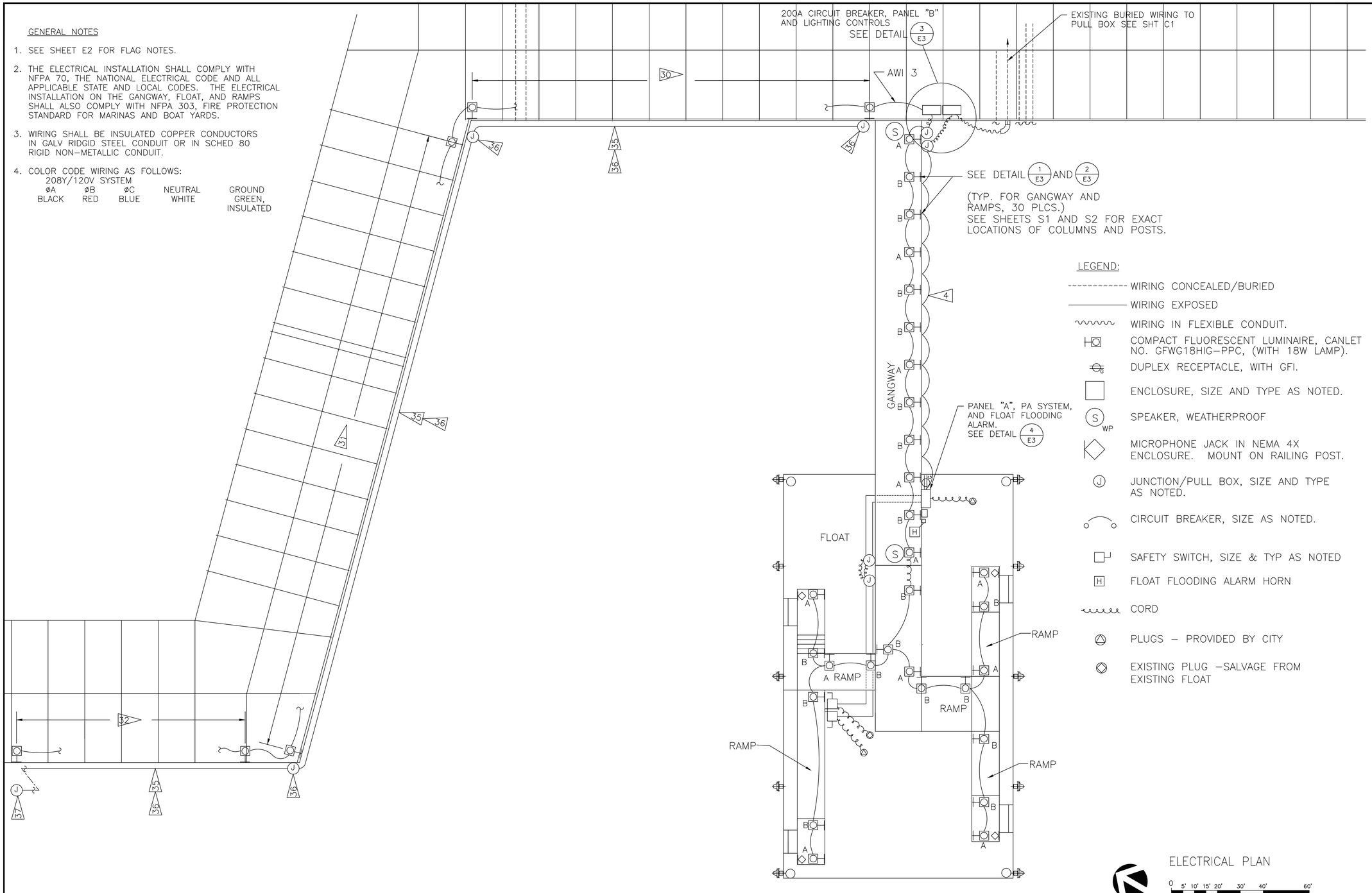

LEGEND:

- WIRING CONCEALED/BURIED
- WIRING EXPOSED
- WIRING IN FLEXIBLE CONDUIT.
- COMPACT FLUORESCENT LUMINAIRE, CANLET NO. GFWG18HIG-PPC, (WITH 18W LAMP).
- DUPLEX RECEPTACLE, WITH GFI.
- ENCLOSURE, SIZE AND TYPE AS NOTED.
- SPEAKER, WEATHERPROOF
- MICROPHONE JACK IN NEMA 4X ENCLOSURE. MOUNT ON RAILING POST.
- JUNCTION/PULL BOX, SIZE AND TYPE AS NOTED.
- CIRCUIT BREAKER, SIZE AS NOTED.
- SAFETY SWITCH, SIZE & TYP AS NOTED
- FLOAT FLOODING ALARM HORN
- CORD
- PLUGS – PROVIDED BY CITY
- EXISTING PLUG –SALVAGE FROM EXISTING FLOAT

ELECTRICAL PLAN

0 5' 10' 15' 20' 30' 40' 60'

SCALE: 1" = 20'

IF THIS SHEET IS LESS THAN 24X36 REDUCE SHOWN SCALE ACCORDINGLY.

REGISTERED PROFESSIONAL ENGINEER
GARY E. GILL
36482
Exp.06/30/00
CIVIL
STATE OF CALIFORNIA

ART ANDERSON ASSOCIATES
148 FIRST STREET BREMERTON, WA 98337 (360) 479-3960 FAX (360) 479-3962
65 MARION STREET SEATTLE, WA 98104 (206) 622-6221

kpff Consulting Engineers
1201 Third Avenue, Suite 900 Seattle, WA 98101
(206) 622-5822 Fax (206) 622-8130

VALLEJO FERRY DOCK TERMINAL
CITY OF VALLEJO, CA.

ELECTRICAL PLAN

DESIGNED	WHH
DRAWN	ELR
CHECKED	MYK/GEG
DATE	8-19-97
JOB NO	FVL03
SHT NO	E1

ALL DRAWINGS REQUIRE FIELD/SITE VERIFICATION - INFORMATIONAL USE ONLY

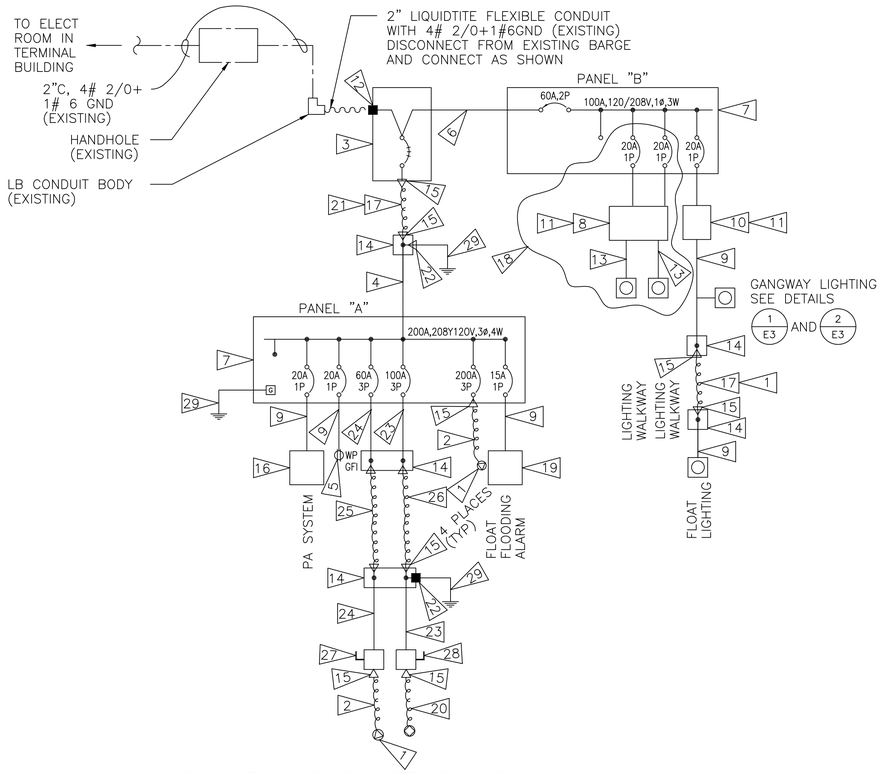

SINGLE LINE POWER DIAGRAM

SCALE: NONE

FLAG NOTES

1. INSTALL PLUG ON CORD. PLUG FURNISHED BY BOAT MFG. MATCH PHASE ROTATION TO BOAT AS REQUIRED.
2. POWER CORD, 100' LONG, 3/C#2 (ROUND). COIL ADJACENT TO CIRCUIT BREAKER.
3. ENCLOSED CIRCUIT BREAKER, 200AT, 3 POLE, 240V, IN NEMA 4X ENCLOSURE. FOR MOUNTING, SEE DETAILS 3/E2 & 4/E2
4. 2"C, 3#3/0, 1#4 NEUTRAL + 1#6 GND.
5. DUPLEX RECEPTACLE, WEATHERPROOF GFI TYPE.
6. 1"C, 3#6+1#10 GND
7. PANELBOARD, SIZE AND TYPE AS NOTED, NEMA 1 BOX. MOUNT INSIDE A NEMA 4X ENCLOSURE. ENCLOSURE SHALL HAVE A HINGED DOOR WITH QUICK RELEASE CLAMPS AND DEVICE FOR PADLOCKING.
8. ASTRONOMIC TIME SWITCH, TORK NO. 7000ZL DPDT, 40A, DPDT, 40A, 120VAC, WITH 16 HR SPRING POWER RESERVE.
9. 1/2"C, 2#12 +1#12 GND, ROUTE ALONG BOTTOM SIDE OF GANGWAY AND FLOAT PLATFORM.
10. LIGHTING CONTROLS – SEE LIGHTING CONTROL SCHEMATIC DESIGN
11. MOUNT IN NEMA 4X ENCLOSURE.
12. 2" LIQUIDTIGHT FLEXIBLE CONDUIT CONNECTOR.
13. 1/2"C, 2#12 + 1#12 GROUND. ROUTE ALONG TOP CORD OF CANOPY STRUCTURE.
14. JUNCTION BOX, NEMA 4X, WITH TERMINAL STRIP. SIZE PER THE NEC.
15. LIQUIDTIGHT STRAIN RELIEF CONNECTOR WITH WIRE MESH GRIP. SIZE TO FIT CORD.
16. PUBLIC ADDRESS SYSTEM MOUNTED IN ENCLOSURE, FIBERGLASS NEMA 4X NOMINAL 20"x16"x12" WITH QUICK RELEASE LATCHES HOFFMAN NO. A20H1612GQRLP + A–20P16. AMPLIFIER IS 60W, ALLIED NO. 958–8006 OR APPROVED EQUAL. MOUNT ON BACK SIDE OF SUPPORT WELDMENT.
17. PROVIDE 4FT LENGTH OF CORD TO SPAN FROM EDGE OF WHARF TO TRANSFER SPAN AND FROM TRANSFER SPAN TO FLOAT. INSTALL SO FLEXIBLE CONDUIT WILL ACCOMMODATE DIFFERENTIAL MOVEMENTS.
18. PART OF AWI–3, SEE SHEET C1.
19. SEE FLOAT FLOODING ALARM SCHEMATIC FOR EQUIPMENT AND WIRING CONNECTIONS
20. EXISTING CORD AND PLUG. CONNECT AS SHOWN. MAINTAIN EXISTING PHASE CONNECTION
21. PORTABLE POWER CABLE, SALVAGE FROM EXISTING BARGE, TYPE G, ROUND 4/C #2/0 WITH #6 GND (ANIXTER NO 5E–2024C)
22. CABLE CONNECTORS, LIQUIDTIGHT
23. 1–1/4"C, 4 #2 + 1 #2 GND
24. 1"C, 4 #6 + 1 #8 GND
25. 5/C #6 TYPE W CORD
26. 5/C #2 TYPE W CORD
27. SAFETY SWITCH, 60A, 3P, 240V NON FUSIBLE, NEMA 4X
28. SAFETY SWITCH, 100A 3P, 240V NON FUSIBLE, NEMA 4X
29. 1/C #6 WELDING CABLE, EXOTHERMIC WELD TO GANGWAY OR FLOAT STEEL
30. INSTALL AND CONNECT 12 LUMINAIRES. MOUNT ON COLUMN SIMILAR TO DETAIL 1/E3 (ROUTE WIRE ON CANOPY STRUCTURE.) (AWI–3)
31. INSTALL AND CONNECT 18 LUMINAIRES. MOUNT ON COLUMN SIMILAR TO DETAIL 1/E3 (ROUTE WIRE ON CANOPY STRUCTURE.) (AWI–3)
32. INSTALL AND CONNECT 5 LUMINAIRES. MOUNT ON COLUMN SIMILAR TO DETAIL 1/E3 (ROUTE WIRE ON CANOPY STRUCTURE.) (AWI–3)
33. PHOTOELECTRIC CONTROL, TORK MODEL 2001 MOUNT IN CANOPY
34. MOUNT ASTRONOMICAL TIME SWITCH IN PADLOCKABLE NEMA 4X ENCLOSURE
35. REMOVE EXISTING 3/4" PLASTIC CONDUIT, CONDUIT CLAMPS, AND TELEPHONE CABLE BETWEEN EXISTING WALKWAY AND WATERFRONT RESTAURANT
36. INSTALL 3/4" GALV. RIGID STEEL CONDUIT COMPLETE, INCLUDING NEMA 4X PULL BOXES, FROM RESTAURANT TO GANGWAY. INSTALL PULL WIRE IN RACEWAY (FOR FUTURE TELEPHONE) MOUNT CONDUIT WITHIN 6" OF TOP OF WALKWAY
37. FIELD VERIFY LOCATION OF J–BOX AT RESTAURANT

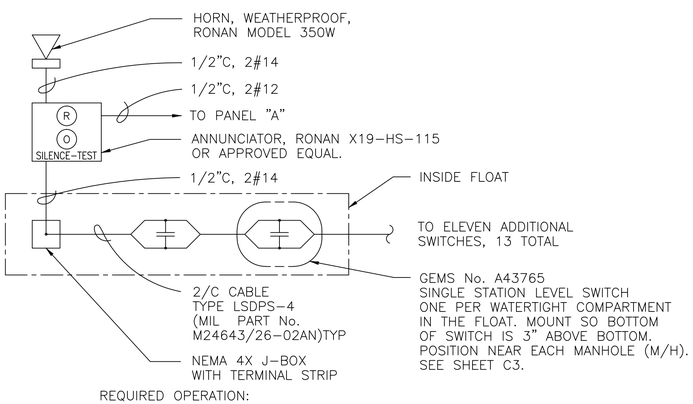

REQUIRED OPERATION:

1. ON ALARM CONDITION, I.E. ANY LEVEL SWITCH DETECTS WATER, HORN SOUNDS, RED LIGHT ON ANNUNCIATOR FLASHES CONTINUOUSLY.
2. WHEN SILENCE BUTTON IS PUSHED, HORN IS SILENCED, RED LIGHT IS CONTINUOUSLY ILLUMINATED. THIS ALARM STATE REMAINS UNTIL THE PROBLEM IS CORRECTED, AT WHICH TIME THE REDLIGHT IS "OFF".
3. THE RED LIGHT (BUT NOT THE HORN) IS MOMENTARILY ILLUMINATED WHILE THE SILENCE/TEST BUTTON IS PRESSED TO TEST THE RED LIGHT.

FLOAT FLOODING ALARM SCHEMATIC

SCALE: NONE

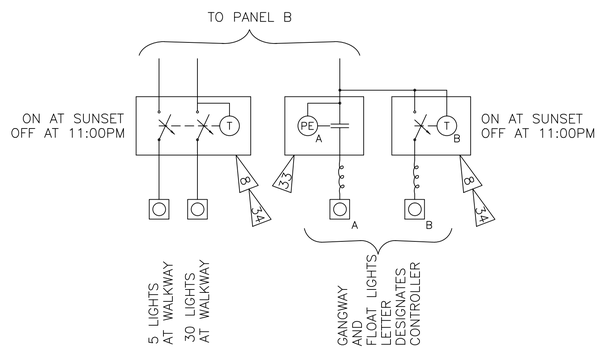

LIGHTING CONTROL SCHEMATIC

SCALE: NONE

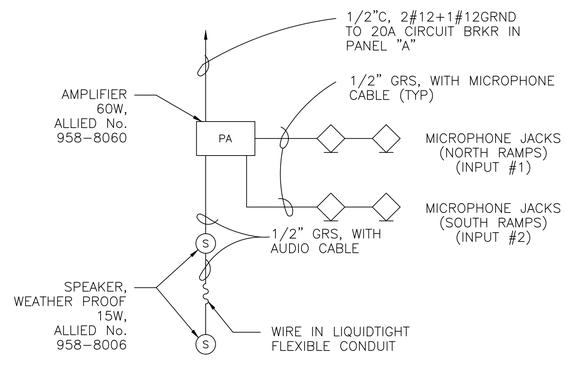

NOTE:

1. PROVIDE 3 HAND HELD MICROPHONES & CORD
2. INSTALL AMPLIFIER IN NEMA 4X PADLOCKABLE ENCLOSURE
3. INSTALL MICROPHONE JACK IN NEMA 4X PADLOCKABLE ENCLOSURE. ENCLOSURE SHALL HAVE SUFFICIENT VOLUME TO ACCOMODATE A HAND HELD MICROPHONE

PUBLIC ADDRESS SYSTEM SINGLE LINE DIAGRAM

SCALE: NONE

IF THIS SHEET IS LESS THAN 24X36 REDUCE SHOWN SCALE ACCORDINGLY.

REGISTERED PROFESSIONAL ENGINEER
GARY E. GILL
36482
Exp.06/30/00
CIVIL
STATE OF CALIFORNIA

ART ANDERSON ASSOCIATES
148 FIRST STREET BREMERTON, WA 98337
(360) 479-5800 FAX 479-5805
65 MARION STREET SEATTLE, WA 98104
(206) 622-6221

kpff Consulting Engineers
1201 Third Avenue, Suite 900 Seattle, WA 98101
(206) 622-5822 Fax (206) 622-8130

VALLEJO FERRY TERMINAL DOCK
CITY OF VALLEJO, CA.

ELECTRICAL DETAILS

DESIGNED	WHH
DRAWN	ELR
CHECKED	MYK/GEG
DATE	8–19–97
JOB NO	FVL03
SHT NO	E2

ALL DRAWINGS REQUIRE FIELD/SITE VERIFICATION - INFORMATIONAL USE ONLY

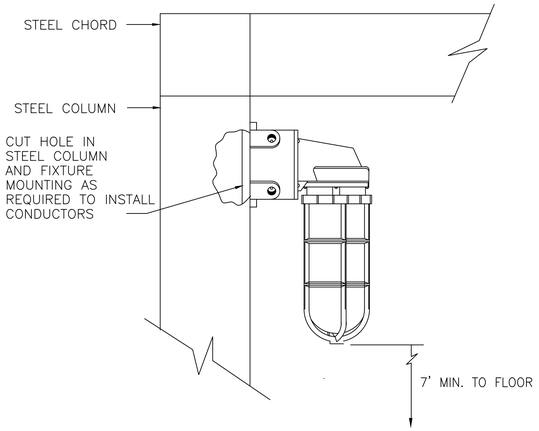

1 E1 E3 DETAIL – LUMINAIRE INSTALLATION
SCALE: NONE

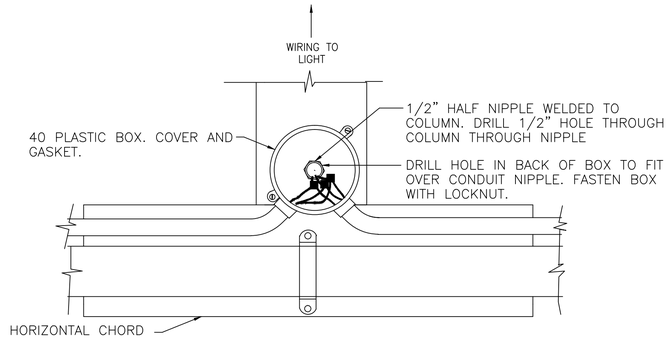

2 E1 E3 DETAIL
SCALE: NONE

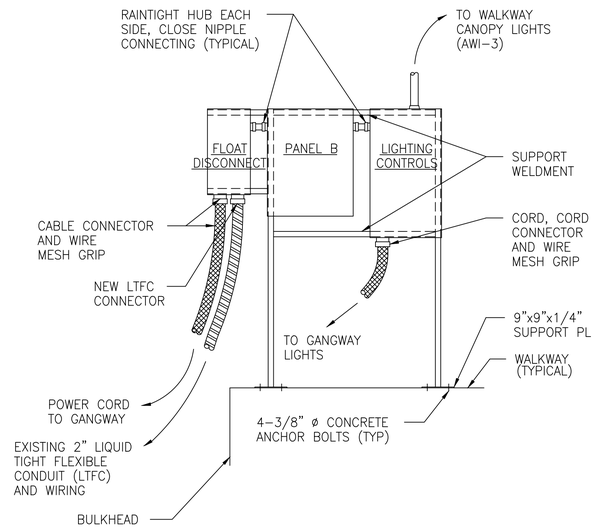

3 E1 E3 DETAIL
SCALE: NONE

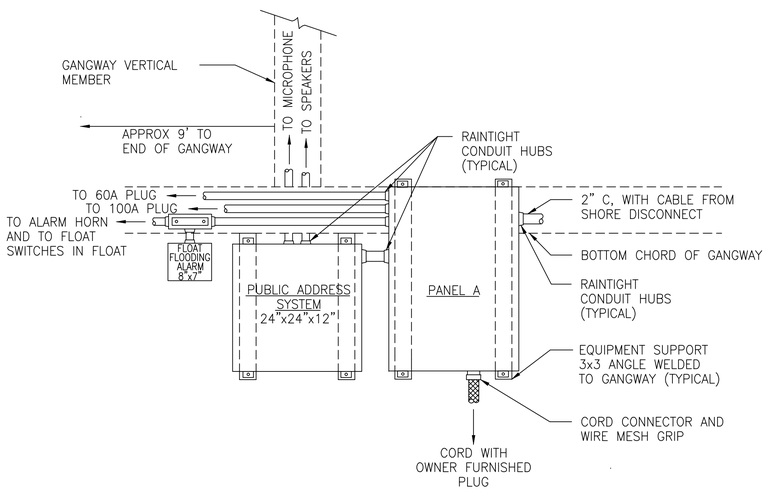

4 E1 E3 DETAIL
SCALE: NONE

IF THIS SHEET IS LESS THAN 24X36
REDUCE SHOWN SCALE ACCORDINGLY.

REGISTERED PROFESSIONAL ENGINEER
GARY E. GILL
36482
Exp.06/30/00
CIVIL
STATE OF CALIFORNIA

ART ANDERSON ASSOCIATES
148 FIRST STREET BREMERTON, WA 98337
(360) 479-5800 FAX 479-5805
65 MARION STREET SEATTLE, WA 98104
(206) 622-6221

kpff Consulting Engineers
1201 Third Avenue, Suite 900 Seattle, WA 98101
(206) 622-5822 Fax (206) 622-8130

VALLEJO FERRY TERMINAL DOCK
CITY OF VALLEJO, CA.

ELECTRICAL DETAILS

DESIGNED	WHH
DRAWN	PS
CHECKED	JRL/GEG
DATE	8-19-97
JOB NO	FVL03
SHT NO	E3