INVITATION FOR BIDS

SAN FRANCISCO BAY AREA
WATER EMERGENCY TRANSPORTATION AUTHORITY

ALAMEDA HARBOR BAY FERRY TERMINAL

DONUT FENDER PILES

IFB #20-002

VOLUME 3

DIVISION 09, 31, 35

TECHNICAL SPECIFICATIONS, APPENDIX A AND APPENDIX B.

MAY 08, 2020

[THIS PAGE INTENTIONALLY LEFT BLANK]

TABLE OF SECTIONS

VOLUME 3

DIVISION 9, 31, 62 – TECHNICAL SPECIFICATIONS

Section	Title
09 97 13	Steel Coatings
31 62 13	Steel Pipe Piles
35 59 13	Marine Donut Fender System

Appendix A - Alameda Harbor Bay Ferry Terminal - Donut Fender Piles Report

Appendix B - Alameda Harbor Bay Ferry Terminal - Donut Fender Piles Drawings

[THIS PAGE INTENTIONALLY LEFT BLANK]

SECTION 09 97 13

STEEL COATINGS

PART 1 - GENERAL

1.1 SCOPE

A. This section provides the minimum requirements for the coating of external and interior ferrous metal surfaces for the Alameda Harbor Bay Donut Fender Piles Project.

B. Work shall include surface preparation, primer, and first and/or final coats, and non- skid surfaces on float deck.

C. When delivered to WETA, all ferrous metal shall be coated.

1.2 REFERENCES

The latest edition of publications listed below form a part of this specification to the extent referenced. The publications are referenced in the text by the basic designation only.

A. American Society of Testing and Materials (ASTM)

1. D610 Evaluating Degree of Rusting on Surfaces of Painted Steel.
2. D659 Evaluating Degree of Chalking of Exterior Paint.
3. D660 Evaluating Degree of Checking of Exterior Paint.
4. D661 Evaluating Degree of Cracking of Exterior Paint.
5. D662 Evaluating Degree of Erosion of Exterior Paint.
6. D714 Evaluating Degree of Blistering of Paint.
7. D772 Evaluating Degree of Flaking (Scaling) of Exterior Paint.

B. National Association of Corrosion Engineers (NACE)

1. NACE Standard SP0188-2006-SG (formerly RP0188), Discontinuity (Holiday) Testing of New Protective Coatings on Conductive Substrate

C. Steel Structures Painting Council (SSPC)

1. SP6 Commercial Blast Cleaning
2. SP10 Near-White Blast Cleaning

1.3 REGULATORY REQUIREMENTS

A. Paint products and applications shall comply with the regulations ofthe:

1. California Environmental Protection Agency, Air Resources Board, Coating Rules in California

2. Bay Area Air Quality Management District

3. 2016 California Green Building Standards Code (Cal. Code Regs., Title 24, Part 11) (Nonresidential, Mandatory) per the California Building Officials (CALBO) and the International Code Council (ICC).

1.4 SUBMITTALS

A. Product data for each coating system specified.

1. Provide a listing of each paint and coating to be used on the project. Include the manufacturer's name, product name, specific Volatile Organic Compound (VOC) data (in g/L) for each product, and the corresponding allowable VOC from the referenced standard.

2. Provide the manufacturer's technical information, including label analysis and instructions for handling, storing, and applying each material proposed for use.

3. For each material, cross-reference the specific coating, finish system, and area of application. Identify each material by the manufacturer's catalog number and general classification.

4. Provide certification by the manufacturer that products supplied comply with all applicable San Francisco, California, and United States regulations limiting VOCs.

B. Coating Manufacturer's "Coating Application, Maintenance and Repair Procedures Manual" for each coating system used.

1. Coating Application: Application shall describe surface preparation requirements, the maximum time allowed between surface preparation and primer application, primer and top coat(s) curing time, and procedure for checking dry film thickness of the primer and top coats(s). Identify procedures for coating critical mil thickness locations (e.g. fillets, edges, welds, bolted connections).

a. Weather and Dew Point.

b. Method of Application (brush, roll, or spray including what type ofequipment).

c. Mil thickness and time between surface preparation and application of primer.

d. Equipment cleanliness.

e. Surface preparation prior to application of eachcoat.

f. Drying time between primer and finish coat(s) and after application of finish coat.

g. Pot Life.

h. Thinning.

i. General application techniques for critical areas to be coated

j. Curing requirements

2. Maintenance: The maintenance procedure shall provide a systematic process for inspection, record keeping and observation, coating application, and repair procedures.

3. Repair: Repair procedures shall establish when a repair is required, what type of repair should be done, with what materials, at what time, and in what manner. Type of failures may include, but are not limited to, undercutting, blistering, pinpoint rusting, delamination, chalking, checking, and abrasion. Repair procedures for above water, tide zone, and below water applications shall be submitted.

C. Samples: Provide the manufacturer's color chart for representative colors available, inclusive of matte, semi-gloss and glossy textures, samples of each color and material to be applied with texture to simulate actual conditions on representative samples of the actual substrate.

1. Paint: After initial colors are selected by the Owner, submit three samples on 4 in. x 4 in. steel substrate for the Owner's review and final color selection.

1.5 QUALITY ASSURANCE

A. Paint Applicator Qualifications: Paint contractors shall be qualified by audit according to criteria accepted under SSPC guidelines.

B. Discontinuity (Holiday) Testing Firm Qualifications: Submit qualifications of testing firm for approval.

C. Single-Source Responsibility: Provide primers and undercoat material produced by the same manufacturer as the finish coat(s) for each type of coating. The Contractor shall provide documentation that the individual coats (i.e., primer, intermediate and top coat) are compatible. Use only thinners recommended by the manufacturer and only within the recommended limits.

D. Final acceptance of job-applied colors will be based on samples.

1.6 GENERAL

A. All structural steel shall have all surface preparation and coatings applied in a shop prior to delivery to the site. Field painting and coating to be minimized and limited to touch up work and coatings applied after field welding.

B. Only a primer coat is to be applied in areas that fall within 6 in. of where field welding of structural steel will occur.

C. Deliver materials to the shop and field in the manufacturer's original, new, unopened

packages and containers bearing manufacturer's name and label and the following information:

1. Name or title of material
2. Manufacturer's name, stock number and date of manufacture
3. Contents by volume, for major pigment and vehicle constituents
4. Thinning instructions
5. Application instructions
6. Color name and number
7. Handling instructions and precautions
8. VOC content in g/L

D. Store materials not in actual use in tightly covered containers at a minimum ambient temperature of 45 degrees F (or greater if required by the manufacturer) in a well-ventilated area. Maintain containers used in storage of coatings in a clean condition, free of foreign materials and residue.

E. Protect from freezing. Keep storage area neat and orderly. Remove oily rags and waste daily. Take necessary precautionary measures to ensure that workers and work areas are adequately protected from fire hazards and health hazards resulting from handling, mixing and applying coatings.

1.7 COATING COLOR SCHEDULE

A. Piling - 0794 Meridian Grey or Approved equivalent Light to medium grey color

1.8 WARRANTY

A. The Fabricator and/or Contractor shall warrant all coating systems for a period of not less than five (5) years.

PART 2 - PRODUCTS

2.1 PREPARATION AND COATING THICKNESS

A. The preparation and coating of surfaces shall be as required herein.

B. Before the application of any coat, all defects on the preceding coat shall be repaired.

C. Where coating is damaged and repairs are made, the affected areas are to be touched up with coating per manufacturer's directions to match the surrounding area.

D. All exposed steel surfaces including sides and edges, shall be painted.

2.2 MATERIALS

A. VOC limits

1. Do not apply any zinc primer with VOC content exceeding 340 g/L.

2. For piles: Do not apply any anticorrosive epoxy primer with VOC content exceeding 400 g/L. Do not apply any second or third coat with VOC content exceeding 300 g/L.

3. Do not apply any coating material with VOC content exceeding 400 g/L.

B. "Carboline" products are listed; equivalent products may be substituted if preapproved.

C. Piling

1. Surface Preparation: SSPC-SP10 (Near White Blast Cleaning)

2. Prime Coat — Carboline Carboguard 61 Epoxypolymide @ 8.0 to 12.0 mils DFT

3. Intermediate Coat: — Carboline Carboguard 61 Epoxypolymide @ 8.0 to 12.0 mils DFT

4. Finish Coat: — Carboline Carboguard 61 Epoxypolymide @ 4.0 to 6.0 mils DFT

PART 3 - EXECUTION

3.1 COATING

A. The Coating Manufacturer shall prepare specifically for this project a Coating Application, Maintenance and Repair Procedures Manual. This manual shall specify specific application, maintenance and repair requirements for this Project.

B. Surface Preparation: Clean surfaces to the surface specifications noted in accordance with the Steel Structures Painting Council specifications.

C. Application:

1. Apply coatings in accordance with coating manufacturer requirements.

2. Apply coatings only when the temperature of surfaces to be coated and surrounding air temperatures are between 50 degrees Fahrenheit and 90 degrees Fahrenheit. Maintain this temperature range 24 hours before and 72 hours after installation of coating.

3. Do not apply coatings in snow, rain, fog, or mist; when the relative humidity exceeds 85 percent (or unless otherwise specified by coating manufacturer); at temperatures less than 5 degrees Fahrenheit above the dew point; or to damp or wet surfaces. Allow wet surfaces to dry thoroughly and attain the temperature and conditions specified before proceeding with or continuing the coating operation.

4. All applicators shall understand and follow the Coating Application, Maintenance and

Repair Procedure Manual Requirements.

3.2 INSPECTION

Each coating shall be inspected for discontinuities (holidays and pinholes) in accordance with NACE Standard SP0188-2006-SG (formerly RP0188), Discontinuity (Holiday) Testing of New Protective Coatings on Conductive Substrates. This standard provides a procedure for electrical detection of minute discontinuities in coating systems that are liquid-applied to conductive substrates other than pipelines. All discontinuities shall be repaired at the Contractors expense.

3.3 MAINTENANCE

A. Responsibility: The coating manufacturer shall be responsible for establishing surface preparation, coating application, maintenance and repair procedures based on the requirements specified herein and by the manufacturer's product requirements.

B. Coating Evaluation: Where evaluation of the coating prior to or during the warranty period indicates coating deterioration or failure, the extent of failure shall be determined by visual inspection and the use of one the following ASTM standards, as required by the type of failure involved:

1. ASTM D610 - Evaluating Degree of Rusting on Surfaces of Painted Steel.
2. ASTM D659 - Evaluating Degree of Chalking of Exterior Paint.
3. ASTM D660 - Evaluating Degree of Checking of Exterior Paint.
4. ASTM D661 - Evaluating Degree of Cracking of Exterior Paint.
5. ASTM D662 - Evaluating Degree of Erosion of Exterior Paint.
6. ASTM D714 - Evaluating Degree of Blistering of Paint.
7. ASTM D772 - Evaluating Degree of Flaking (Scaling) of Exterior Paint.

3.4 REPAIR

A. The Contractor shall be responsible for coating repair from the date of Notice to Proceed through the warranty period.

B. Repair procedures shall be as specified by the coating manufacturer. Repair procedures will vary because of the variety of coating failure types.

C. At substantial completion, repairs to damaged or defaced coated surfaces shall be complete.

D. Field welding and splicing of steel pipe piles shall require repair and re-application of shop coatings per manufacturer's recommendations.

3.5 CLEANING

A. Clean-Up: At the end of each work day, remove rubbish, empty cans, rags and other

discarded materials from the site.

B. Upon completion of work, clean spattered surfaces. Remove spattered coatings by washing, scraping or other proper methods, using care not to scratch or damage adjacent finished surfaces.

END OF SECTION 09 97 13

[THIS PAGE INTENTIONALLY LEFT BLANK]

SECTION 31 62 13

STEEL PIPE PILES

PART 1 - GENERAL

1.1 SCOPE

A. This Section provides the minimum requirements for fabrication, testing, inspection, and installation of all steel pipe piles, including fiberglass cap at the top of piles, as indicated on the RFP (drawings) and specified herein. This specification pertains to the following:

1. Steel Pipe Piles

1.2 RELATED SECTIONS

A. Section 01 32 00 – Photographic Documentation, See Volume I

B. Section 01 33 00 – Submittals, See Volume 2

C. Section 35 59 13 - Donut Marine Fender System

D. Section 09 97 13 - Steel Coatings

1.3 REFERENCES

The latest edition of the publications listed below form a part of this specification to the extent referenced. The publications are referred to in the text by the basic definition only.

A. American Petroleum Institute (API)

1. API 5L Specification for Line Pipe

2. API 2B Specification for Fabrication of Structural Steel Pipe

B. American Welding Society (AWS)

1. AWS A5.1 Specification for Carbon Electrodes for Shielded Metal Arc Welding

2. AWS D1.1 Structural Welding Code - Steel

C. American Society for Testing and Materials (ASTM)

1. ASTM A36 Standard Specification for Carbon Structural Steel

2. ASTM A252 Standard Specification for Welded and Seamless Steel Pipe Piles

3. ASTM A370 Standard Test Methods and Definitions for Mechanical Testing of Steel Products

4. ASTM A537 Standard Specification for Pressure Vessel Plates, Heat-Treated, Carbon-Manganese-Silicon Steel

D. Military Specifications

1. MIL-A-18001 Anodes, Sacrificial Zinc Alloy

1.4 GEOTECHNICAL REFERENCES

The following references were used for Alameda Harbor Bay Ferry Terminal known site conditions:

A. Harbor Bay Ferry Terminal Float Guide Pile Study issued to JM Turner Engineering by Winzler & Kelly Dated September 2004.

B. City of Alameda Harbor Bay Ferry Dredging sampling and Analysis Results Report for Episone No 2 USACE Permit No. 2009-00203s, BCDC Permit No. 9-90 by CLE Engineering Dated July 2010.

1.5 PERMITS

Piles shall be installed in compliance with all applicable local, state and federal environmental requirements.

1.6 SUBMITTALS

All submittals shall be in accordance with Volume 2 - SUBMITTALS.

A. Pile Installation Plan - Describe the method of transporting, handling, and installing piles, including marine equipment to be used and sequence of installation. Restrictions as shown on the Construction Drawings shall be included in the plan. Submit plan at least thirty (30) days prior to delivery.

B. Pile Installation Equipment - Provide description of the pile installation equipment and hammer specifications to be employed in the work in the plan. At a minimum, include the following:

1. Make and model
2. Dynamic force (tons)
3. Steady state frequency range (cycles per minute)
4. Vibrating weight (pounds)
5. Amplitude (inches)
6. Maximum pull capacity (tons)
7. Non-vibrating weight (pounds)
8. Power pack description
9. Means of turbidity control
10. Casing or other means of maintaining the pile excavation through the overlying soil

including Bay Mud and Sand Layer

C. Pile Placement - Detail the installation sequence of the piles and the method proposed for controlling the location and alignment of piles, installing the piles through Bay Mud and dense sand layers while maintaining pile plumb.

D. Shop Drawings:

1. Steel pipe piles: Show all locations, markings, layouts, materials, sizes, and shapes and indicate all methods of connection and bracing. Submit detail drawings of pile splices prior to fabrication.

2. Field splice details: Stabbing points, blocks, shims, etc. required to align pile sections when working flat and in the leads.

3. Pile installation template and installation procedure

4. Cathodic protection system

5. Pile top: cover cone

E. Manufacturers Product Data

1. Welding electrodes and rods

2. Coating system

3. Cathodic protection anodes

F. Testing and Inspection Reports

G. Certificates: Submit certification from manufacturers, suppliers, fabricators, etc. attesting that the following conform to the requirements:

1. Steel pipe piles

2. Welding electrodes and rods

3. Welding procedures and qualifications

4. AISC Quality Certification

5. Coating System (per Section 09 97 13 - STEEL COATINGS)

6. Paint marking compatibility approval by coating manufacturer.

7. Steel Plate Fabricator's Association (SPFA) certification when plates are used to fabricate pipe.

H. Pile Drivability Analysis. Contractor to provide a vibratory drivability analysis.

I. Hydro-acoustic and Above-Water Monitoring Plan - Submit a detailed hydro-acoustic, above-water, and biologic monitoring plan, conforming to project requirements for review.

J. Pile Delivery and Handling Plan

K. Pile Installation Records

1. Submit the proposed form for compiling pile driving records 30 days prior to commencement of work.

2. Submit complete and accurate pile installation records within fifteen (15) calendar days after completion of installation.

1.7 TESTING AND INSPECTION

A. Testing and inspection of the steel pipe piles shall be performed in accordance with the requirements in AWS D1.1, API Spec. 2B, and API Spec. 5L. Where these specifications overlap, the most stringent requirement shall apply. Hydrostatic testing may be omitted.

B. Welder Qualifications

1. Provide AWS D1.1/D1.1M qualified welders, welding operators and tackers. The Contractor shall develop and submit the Welding Procedure Specifications (WPS) for all welding; including welding done using prequalified procedures.

2. Prequalified procedures may be submitted for information only; however, procedures that are not prequalified shall be submitted for approval.

3. Parts to be welded shall be free of dirt, grease, and other contaminants, and shall fit up properly for sound welding. Surfaces to be welded shall not be cut with oxygen. Sawing, shearing, or machining may be used.

4. Temporary welds, run-off plates, and backing strips shall be removed from exposed surfaces and ground smooth.

C. Shop Inspections

1. The fabricator shall perform, at his expense, normal quality control procedures in accordance with API 2B, API 5L, AWS D1.1, industry standards and his quality control manual. The Owner shall be allowed access to all parts of the Work at all times and shall be furnished such information and assistance by the Contractor and fabricator as may be required for a complete and detailed inspection.

2. Special inspections will be performed by Owner's Representative in accordance with 2013 California Building Code Chapter 17 and the requirements herein.

3. Fabrication inspection for pipe piles at the manufacturing plant are as follows:

a. Extent – Non-spirally welded pipe, for each pipe:

i. 100 percent VT all welds, both sides.

ii. For each straight length of weld, UT or RT inspect 25 percent of length of transverse and 10 percent of length of longitudinal welds, and MT or PT inspect 20 percent of length of transverse welds. For transverse welds, distribute MT or PT inspection equally to each side of weld, 20 percent each

inspectable side or face. For each straight length of weld, if no defects (rejectable indications) are found, no further inspection of that weld length is required.

iii. If one or more subsurface defects are found, UT or RT the remainder of the transverse weld with defect(s), and another 10 percent of longitudinal weld with defect(s). If one or more subsurface indications are found in the longitudinal weld, inspect the remainder of the weld.

iv. If one or more surface defects are found, MT or PT inspect another 20 percent of the transverse welds and 10 percent of the longitudinal welds. If one or more surface defects are found, MT or PT inspect the remainder of the weld.

b. Extent – Spirally welded pipe, for each pipe:

i. 100 percent VT all welds, both sides.

ii. 20 percent UT or RT and 10 percent MT or PT the length of spiral weld and plate splice welds (MT 10 percent each inspectable side or face). If no defects are found, no further inspection is required. For MT or PT, inspect both sides of weld.

iii. If one or more subsurface defects are found, UT or RT inspect another 25 percent of the weld. If one or more surface defects are then found, inspect the remaining length of weld.

iv. If one or more surface defects are found, MT or PT inspect another 25 percent. If one or more surface defects are found, inspect the remaining length of weld.

v. When choosing portions of weld lengths to inspect, choose the length that appears most likely to contain defects. If this is not obvious, randomly select.

vi. MT or PT surface inspection is total per length and by side or face.

vii. If no defects are found in the first four pipes inspected, inspect the next four by VT, but only two of the four with MT and UT as described above. If no defects are found, inspect the next four by VT, but only one of the next four by MT and UT. If no defects are found, inspect the next eight, by VT, but only one of the eight by MT and UT. If no defects are found, repeat with the next eight. When defects are found, restart VT, MT, and UT inspection on each of the next four pipes.

viii. Repaired weld lengths shall be inspected at 100 percent VT, MT or PT, and UT or RT.

ix. The Contractor shall be responsible for performing fabrication / erection / inspection at the pile manufacturing plant, as defined above.

x. At the Contractor's option, inspection will be witnessed by the Contractor's Welding Inspector in conformance with the requirements of API 5L, Appendix H.

xi. Records verifying that this testing was accomplished and that all tested welds were in conformance with these specifications shall be submitted with the manufacturer's mill certificate.

D. Field Inspections

1. After welds are completed, they shall be hand or power-brushed and thoroughly cleaned by the Contractor before field inspection.

2. The Owner will perform 100 percent visual inspection of welding, in accordance with AWS D1.1.

3. The Owner will engage the services of an independent inspector/laboratory to perform the ultrasonic testing.

4. Ultrasonic testing will be performed in accordance with AWS D1.1 and the requirements herein to augment the visual inspection of all pile splice welds.

5. Field splice weld inspection requirements for pipe piles follows:

a. Butt splice welds shall be nondestructively tested (NDT) from the outside in conformance with the requirements of AWS D1.1 as follows:

i. 100 percent VT

ii. 100 percent MT or PT

iii. 100 percent RT or UT

6. Correction of Defective Welds: Weld areas which contain defects based on AWS D1.1 shall be repaired in accordance with AWS D1.1 paragraph 5.26 by the Contractor at his expense. The repair shall conform to the requirements of AWS D1.1/D1.1M, Section 6, for cyclically loaded non-tubular connections subject to tensile stress.

E. Repair of the Coating System: Repair of the Coating System shall be at Contractor's expense and in accordance with coating manufacturer's instructions.

F. Testing of Mechanical Properties: Results of testing material properties shall be in accordance with the material property specification used to fabricate the pipe piles (i.e., API 5L, ASTM 252). In addition, results of the following tests are required before the installation of piles can begin:

1. Tensile Tests:

a. Test Specimens: Tensile test orientation shall be relative to the pile. At the option of the manufacturer, the specimen may be either full section, strip specimen or round bar specimen. The tensile testing procedure shall conform to the requirement of ASTM A370, Methods and Definitions for Mechanical Testing of Steel Products.

b. Frequency: Tensile tests shall be made at the frequency of one pile per each pile size.

c. Longitudinal Tensile Tests: At the option of the manufacturer, longitudinal tests may utilize a full specimen, or for pipe with a wall thickness greater than ¾ in., a ½ in. diameter round bar specimen. The strip specimen shall be tested without flattening.

d. Transverse Tensile Tests: The transverse tensile properties shall be determined as follows: The yield strength, ultimate strength and elongation values shall be determined on a flattened rectangular specimen. The same method of testing shall be employed for all lots for a given pile diameter and wall thickness. All specimens shall represent the full wall thickness of the pipe from which the specimen was cut.

e. Weld Tensile (Reduced Section Tension) Tests: The weld tensile test specimens shall be taken at 45 degrees to the weld with the weld at the center and shall represent the full wall thickness of the pipe from which the specimen was cut. Weld reinforcement shall not be removed unless directed by Owner's Representative.

2. Guided – Bend Tests:

a. Test Specimens: The test specimens shall be taken from the spiral welded pipe of each combination of outside diameter and wall thickness containing skelp weld ends. The specimens shall not contain repair welds. Tests shall be in accordance with AWS D1.1, Clause 4. One test per each pile size.

b. Charpy V-Notch shall be performed conforming to the requirements of the API 5L.

G. Pile Installation Observation: Pile installation shall be performed under the continuous observation of a Geotechnical Engineer licensed as a PE in the State of California to confirm that the driving and coring conditions are similar to those expected based on the soil conditions used in the pile design.

1.8 PRODUCT HANDLING

A. Use all means necessary to protect steel piles before, during, and after installation and to protect the installed work and materials of all other trades.

B. In the event of damage, immediately make all repairs and replacement necessary and at no additional cost to the Owner.

PART 2 - PRODUCTS

2.1 MATERIALS

A. Steel Pipe Piles

1. All steel pipe pile material used for ferry float donut piles must be:

a. API 5L Grade X52 with SR5 or SR6 pipe OR

b. Fabricated in accordance with ASTM A252 using ASTM A537 Class II plate

2. All pipe material shall be new. Provide mill certificates for pipe pile materials.

B. Pile Cover Cones: Fiberglass.

2.2 FABRICATION

A. STEEL PIPE PILES

1. Pipe piles may be manufactured with longitudinal seam or helical (spiral) seam.

   Fabricator of steel pipe shall be certified by the Steel Plate Fabricator's Association (SPFA) when plates are used to fabricate pipe. Pipe piles shall be fabricated in accordance with one of the following standards (neglecting any requirements that welds be longitudinal), and the additional requirements in this specification:

   i. API 5L PSL 1 or PSL2 (hydrostatic testing not required)

   ii. ASTM A252 with geometry meeting API requirements

2. Welding shall be performed in accordance with the requirements in AWS D1.1.

3. At the donut fender piles, spiral, longitudinal, and butt welds from 9'-6" below Mean Lower Low Water to the pile top must be ground flush with the pile face.

4. Fabrication Tolerances:

   a. Overall length +/- 3 inches;

   b. Deviation from a straight line shall not exceed 0.1 percent along the entire length of pile.

B. PILE SPLICES

1. No more than two (2) shop splices shall occur in any 40 ft. length of pile.

2. Splices shall be at least 10 ft. apart

3. No more than 1 field splice shall be made in each pile.

4. Splice welds shall be complete joint penetration groove welds using ASW D1.1 prequalified joint details and shall be ultrasonically tested.

5. Weld Bead Height: The weld bead height shall not be greater than 3/16 inch typically and shall be ground flush with outer wall per paragraph 2.2 within portion of length bearing with UHMW elements of donut fender piles and float guide piles. Refer to the drawings.

6. Misalignment: Misalignment of the weld beads shall not exceed 1/8 inch. This applies only to double-sided welded pipe.

2.3 PILE MARKING

A. Mark piling with lines at one-foot intervals from tip to top. Number every 5 ft. increment. Marking should be neat in appearance.

B. Markings shall be done with high visibility paint and be clearly visible and legible to the naked eye at a distance of 75 ft.

C. Paint markings on coated pile sections shall be of material approved by the coating manufacturer.

D. Piles not properly marked will be rejected

2.4 PILE COATING SYSTEM

A. The coating system for all piles shall be in accordance with Contract Specification Section 09 97 13 – STEEL COATINGS.

B. All coating damaged during handling shall be repaired in accordance with coating manufacturer's recommendations, at Contractor's expense.

2.5 PILE INSTALLATION TEMPLATE

A. The Contractor shall provide a template to guide the piles during installation if required to achieve the installation tolerances noted herein.

2.6 CATHODIC PROTECTION

A. New zinc anodes shall be provided for the protection of submerged length of the piles from corrosion.

B. Three 60-pound zinc anodes with galvanized steel straps conforming to Military Specification MIL-A-18001 shall be provided for each pile.

C. The anodes shall be installed at locations shown on the Construction Drawings.

D. The anode brackets shall be shop-installed prior to pile coating.

PART 3 - EXECUTION

3.1 PILE INSTALLATION PROCEDURE

A. All work shall be performed using marine equipment including a floating crane, pile installation equipment, and other associated barges and facilities.

B. Use equipment that is generally used in standard pile installation practice.

C. All pile driving shall be conducted in compliance with noise and vibration thresholds defined for specific geographic areas and with the requirements stated in the regulatory permits.

D. Vibratory hammers shall be used for installation of the piles. Vibratory hammer to be used by the Contractor shall be of such capacity that the required penetration shall be obtained without damage being done to the piles. The following criteria represents the minimum

criteria for the vibratory hammer. Contractor is responsible for reviewing available information and making final selection of equipment needed to reach the required minimum embedment shown on Drawings.

1. Minimum Eccentric Moment 17,200 in-lbs (198.17 kgm)
2. Frequency Maximum (VPM) 0-1,350 vpm
3. Drive Force 225 tons (2,270 kN)
4. Minimum Horse Power 1200 HP (883 kW)
5. Drive Pressure 0-4,500 psi (310 bar)

E. The size or capacity of vibratory hammer must be as recommended by the hammer manufacturer.

F. Operate at manufacturer's recommended settings.

G. Use fixed leads, template or other suitable means for holding pile firmly in position.

H. Install piles with equipment of the same model and manufacturer, same energy and efficiency, and using the same installation system detailed in the approved Pile Installation Plan.

I. The Contractor shall provide facilities as required to assist inspection of driven piles and cooperate with inspection personnel to expedite work.

3.2 INSTALLATION

A. Pile locations shall be laid out by the Contractor in accordance with the Construction Drawings and approved Shop Drawings. All piles shall be installed in their design location, alignment both laterally and longitudinally.

B. Notify Owner 10 days prior to the date pile installation. Notify the Owner at least 48 hours prior to pile driving.

C. Note that in-water work is permitted to the work window and conditions described in regulatory permits.

D. Once pile installation has begun, keep conditions such as alignment constant. Install each pile continuously and without interruption until the required minimum embedment has been attained.

E. The Contractor shall survey the final location of the driven piles (after cut-off) on a weekly basis, update the Shop Drawings as required and provide the information to the Owner. Take special precautions to ensure against buckling of pile or leaning away from plumb position.

F. Care should be taken during installation to prevent and correct any tendency of piles to deviate or walk.

G. The contractor shall be prepared to implement methods if refusal occurs prior to reaching minimum tip elevation shown on the RFP drawings. As approved by Owner upon written request, Contractor may predrill holes of depth and diameter required. For refusal in dense soil, predrilling should not exceed 80% of the outside diameter of the pile. No additional expenses shall be incurred by the Owner for predilling associated with dense

soil. Written approval from the Engineer must be given prior to predrilling.

3.3 PILE INSTALLATION CRITERIA

A. All piles shall be installed to the minimum embedment indicated in the Contract Drawings.

B. The Owner reserves the right to modify the above criteria if conditions are encountered in the field which, in their opinion, make it necessary to do so.

C. Tolerances: Pile placement will be accepted when within the following tolerances:

1. Tolerances:

a. Plan Location- Donut Fender Piles	+/- 2.0 Inches
b. Vertical Top El.	+/- 1.5 Inches
c. Plumb	+/- 0.5 Percent

2. Piles may be pulled into position, within limits, on written request of Contractor and written approval of Owner's Representative.

D. Obstructions:

1. Any obstruction encountered shall be reported to the Owner.

2. The Owner will determine whether the Contractor shall do any of the following options: (a) Remove the obstruction and install the pile; (b) Leave the obstruction and relocate the pile; or (c) Leave the obstruction and install the pile as the obstruction can be penetrated by the steel pipe piles.

3. When resistance to driving or obstruction is encountered without achieving the minimum tip elevation, the Contractor shall immediately notify the Owner.

3.4 FIELD SPLICES

A. Field splices if required shall be approved by the Owner prior to installation.

B. Use minimum 3/8 in. backing rings for all field splices. Attachment of the rings to the pipe shall be performed by using the minimum size and spacing of tack welds that will securely hold the backing ring in place. Tack welding shall be performed in the root area of the weld splice, i.e., location that will be covered by the splice weld. The gap between the backing ring and the pipe shall be no greater than 5/64 in. Provide the weld detail to the engineer for approval.

C. Construct splices to maintain the true alignment and position of the pile section. Splices shall be made with complete penetration welds and shall develop the full combined strength of the pile in bending, tension, and bearing. Non-destructive testing of pile splice welds is required. Perform 100 percent VT, MT, and UT of splice welds.

D. Limit the variation in edge alignment for abutting steel pipe pile ends to 0.10 times the wall thickness, with a maximum allowable variation of 0.063 in. Submit requested larger variations to the engineer for approval.

3.5 PILE CUTOFF

A. The Contractor shall provide a 2-ft sacrificial length at the top of the pile to allow for damaged pile cut-off and to accurately implement the required cut-off elevations.

B. Any damage to coatings due to pile installation or cutting shall be repaired.

3.6 DAMAGED PILES

A. Do not install piles damaged or suspected of damage until inspected and approved by the Owner.

B. Pile damaged or impaired for use during driving shall be pulled and replaced with new piles as directed by the Owner without additional cost.

C. The Owner may require that any pile suspected of being damaged to be pulled for inspection.

D. Replace piles pulled as directed and found to be damaged with new piles at the Contractor's expense.

E. All repair costs for pile and coating including additional materials and labor required, shall be at the Contractor's expense.

3.7 PILE INSTALLATION RECORDS

A. The Owner shall maintain a pile installation log showing the following:

1. All piles shall be referenced per the numbering system shown on Contractor's Shop Drawings.

2. Record all pile lengths as furnished and the length of pile in place. Include elevations of tip and butt before and after cutting off and embedment into the sand layer.

3. Provide as-driven survey drawing showing actual location (coordinates, elevations, and plumbness) of all piles. This shall be a drawing prepared for this record (i.e., not a copy of the Construction Drawings).

4. Record the pile penetration and the rate of penetration.

5. Include in the record the type and size of hammer and drill used. Record any unusual occurrence during pile installation.

END OF SECTION

[THIS PAGE INTENTIONALLY LEFT BLANK]

SECTION 35 59 13

MARINE DONUT FENDER SYSTEMS

PART 1 - GENERAL

1.1 SCOPE

The work under this Section consists of design, fabrication, and installation of a steel pile with a floating donut style fender in accordance with the details shown on the contract drawings. WETA to supply two (2) donut fenders. The Contractor shall pick up donut fenders at WETAs Central Bay Operations and Maintenance Facility, noted below, and deliver to final destination. The Contractor shall furnish all labor, equipment, utilities, and incidental items necessary for the installation of donut marine fender systems as shown on the RFP drawings and specified herein.

Central Bay Operations and Maintenance Facility
670 West Hornet Avenue,
Alameda CA 94501

This specification pertains to the following:

- Donut fender piles protecting the end of the ferry landing float

1.2 RELATED SECTIONS

A. Section 09 97 13 - Steel Coatings

B. Section 31 62 16 - Steel Pipe Piles

1.3 REFERENCES

The publications listed below form a part of this specification to the extent referenced. The publications are referred to in the text by the basic definition only.

A. American Society for Testing and Materials (ASTM)

1. ASTM A36 — Specification for Carbon Structural Steel
2. ASTM D256 — Test Methods for Determining the Izod Pendulum Impact Resistance of Plastics
3. ASTM D412 — Test Methods for Rubber Properties in Tension
4. ASTM D624 — Test for Rubber Property Tear Resistance
5. ASTM D638 — Test Method for Tensile Properties of Plastics
6. ASTM D785 — Test Method for Rockwell Hardness of Plastics and

Electrical Insulating Materials

7. ASTM D1052 Specification for Measuring Rubber Deterioration (Cut Growth Using Ross Flexing Apparatus)

8. ASTM D1630 Specification for Rubber Property- Abrasion Resistance (NBS Abrader)

9. ASTM D1894 Standard Test Method for Static and Kinetic Coefficients of Friction of Plastic Film and Sheeting

10. ASTM D2240 Standard Test Method for Rubber Property- Durometer Hardness.

11. ASTM D3575 Test Methods for Flexible Cellular Materials Made From Olefin Polymers

1.4 SUBMITTALS

Submit the following in accordance with the General Provisions of these Specifications.

A. Manufacturer's Catalog Data: Include Manufacturer's product data for all fender elements, hardware, including bolts, anchor bolts, inserts, nuts, washers, chains, turnbuckles, dimensions, material specifications, working loads and ultimate loads, as applicable.

B. Test Fender Performance Reports: Submit reports for tests specified for fender and fender material performance.

1.5 DELIVERY, STORAGE, AND HANDLING

Fenders shall be undamaged when delivered and shall be handled and stored so as to prevent damage such as bending or abrading end fittings or cutting of rubber. Protect fenders from exposure to damaging liquids, oils, and greases

1.6 WARRANTY

Furnish the manufacturer's warranty. The warranty period shall be not less than 10 years from the date of acceptance of the work.

1.7 FENDER PERFORMANCE

A. The fender shall also reflect the following characteristics:

1. Type: Foam-Filled Donut

2. Minimum Energy Absorption: 8.7 kip-ft per foot

3. Maximum Reaction Force: 29.5 kips per foot

4. Donut Fender Diameter: 6 feet Nominal

5. Flat Side Freeboard Height: 10 feet minimum

6. Overall Flat Side Height: 15 feet

7. Pile Size: 36 in. diameter

8. Fender Color: Black

1.8 QUALIFICATIONS

The fender manufacturer and supplier must have a minimum of 20 years of experience in the supply of marine donut fenders. Documentation supporting this qualification shall be provided with the technical data submittal required for the fender.

PART 2 - PRODUCTS

2.1 FREE FLOATING, FOAM FILLED, DONUT MARINE FENDER.

A. Provide a MFI Ocean Guard Foam-Filled Donut Fender, 6-foot nominal diameter by 15-foot flat length for a 3 ft pile, Extra High Capacity (EHC) or approved equivalent.

2.2 CONFIGURATION

A. The fender shall be free floating with a cylindrical body (axis vertical).

B. The inner bearing surfaces between the fender and the pile shall permit the fender to rise and fall with the water level, and/or rotate around the pile without binding.

C. The bearing materials shall be fixed to, but removable from, the internal core.

D. When the Donut is centered on the pile, the clearance between the bearing surfaces and the pile shall be one inch maximum.

E. There shall be nothing on the core that would prevent deflection of the resilient foam layer to less than full deflection.

F. Lifting eyes shall be provided at each end, top and bottom, of the Donut.

G. An annular layer of resilient closed-cell foam shall be fixed to the internal core. This layer shall be continuous from the internal core surface to the outer skin of the fender.

H. The exterior surface of the fender (excluding steel parts) shall be a weather-resistant polyurethane elastomer, reinforced with multiple layers of continuous nylon filaments.

2.3 BEARING MATERIAL

A. Bearing material shall be of ultra-high molecular weight polyethylene (UHMWPE).

B. Bearing material shall be UV-stabilized and resistant to abrasion, oil, seawater, and weather.

C. Sufficient bearing material shall be used to distribute the reaction load over the pile evenly.

D. The material shall be at least 2 in. thick and distributed around the entire inside surface of the steel core.

E. The material shall have a wear surface of at least 1 inch.

2.4 RESILIENT FOAM

A. The resilient foam core shall be homogeneous and of one-piece fabricated construction and shall not be in chip or granular form.

B. The form core shall not contain scraps, strips, or sheets of foam either rolled or stuffed into the required shape unless pieces are bonded together in layers of uniform patterns to form a homogeneous, one-piece core.

C. Homogeneous foam rings of adequate thickness to insure performance of the fender are acceptable provided the Contractor can show a minimum 10-year performance of similar fenders.

D. Foam shall be resilient foam with closed-cell, cross-linked polyethylene as specified below, fabricated in a homogeneous form.

E. The foam core shall be of heat-laminated construction.

F. Use of chopped, granulated, or otherwise particulate foam is not acceptable.

2.5 FENDER SKIN

A. The elastomer skin of the fender shall be free from cracks, burrs, warpage, checks, chipped or blistered surfaces, and shall have a smooth surface.

B. The outer skin of the fender shall be constructed of polyurethane elastomer reinforced with continuous nylon filaments.

C. The elastomer skin (with wraps) shall extend along the entire longitudinal axis of the fender, over the ends of the resilient foam layer, and onto the rigid core, and shall completely enclose all the filament wraps.

D. The fender skin shall be bonded securely to the steel of the internal core.

E. Filament wraps shall be evenly distributed within the inner 75% to 90% of the skin thickness.

F. Color: Fender skin color shall be black throughout the entire thickness. Galvanized

hardware shall be unpainted.

G. Reparability: The fender casing shall be repairable in the event of tears or punctures in the elastomer skin. Required repair materials shall be readily available from the fender manufacturer.

PART 3 - EXECUTION

3.1 INSTALLATION

Install fenders as indicated on the Construction Drawings and in accordance with the manufacturer's recommendations.

END OF SECTION

[THIS PAGE INTENTIONALLY LEFT BLANK]

MARCH 2020
WATER EMERGENCY TRANSPORTATION AUTHORITY

ALAMEDA HARBOR BAY FERRY TERMINAL DONUT FENDER PILES

COWI

[PAGE LEFT BLANK INTENTIONALLY]

COWI

ADDRESS COWI North America, Inc.
1300 Clay St.
7th Floor
Oakland, CA 94612
USA

TEL +1 510 839 8972
FAX +1 510 839 9715
WWW cowi.com

MARCH 2020
WATER EMERGENCY TRANSPORTATION AUTHORITY

ALAMEDA HARBOR BAY FERRY TERMINAL DONUT FENDER PILES

PROJECT NO.	DOCUMENT NO.
A	

VERSION	DATE OF ISSUE	DESCRIPTION	PREPARED	CHECKED	APPROVED
0	02-25-2020		JRVS	AESP	JMC

[PAGE LEFT BLANK INTENTIONALLY]

CONTENTS

1	Executive Summary	7
2	Introduction – Purpose of Report	8
2.1	Assumptions Used for Design	8
2.2	Terminal History	9
3	Design Criteria for Piles	10
3.1	Vessel	10
3.2	Site Parameters	10
3.3	Berthing Demands	10
3.4	Material Properties	11
3.5	Design Codes	11
3.6	Structural	11
3.7	Geotechnical	11
3.8	Load Factor Combinations	11
Appendix A – Drawings		12
Appendix B – Calculations		13
Appendix C - Technical Specifications		22

[PAGE LEFT BLANK INTENTIONALLY]

1 Executive Summary

The following section summarizes the recommendations for the new donut fender piles at the Alameda Harbor Bay Ferry Terminal.

The terminal calls for two (2) 36-inch diameter steel pipe piles with 1-inch thick wall by 85-foot long piles. The piles are to be fitted with a 6-foot diameter donut fender by approximately 17-foot long. The recommended top of pile is to be at EL +22.00 MLLW, similar to the existing terminals, with a minimum tip elevation at EL -63.00 MLLW.

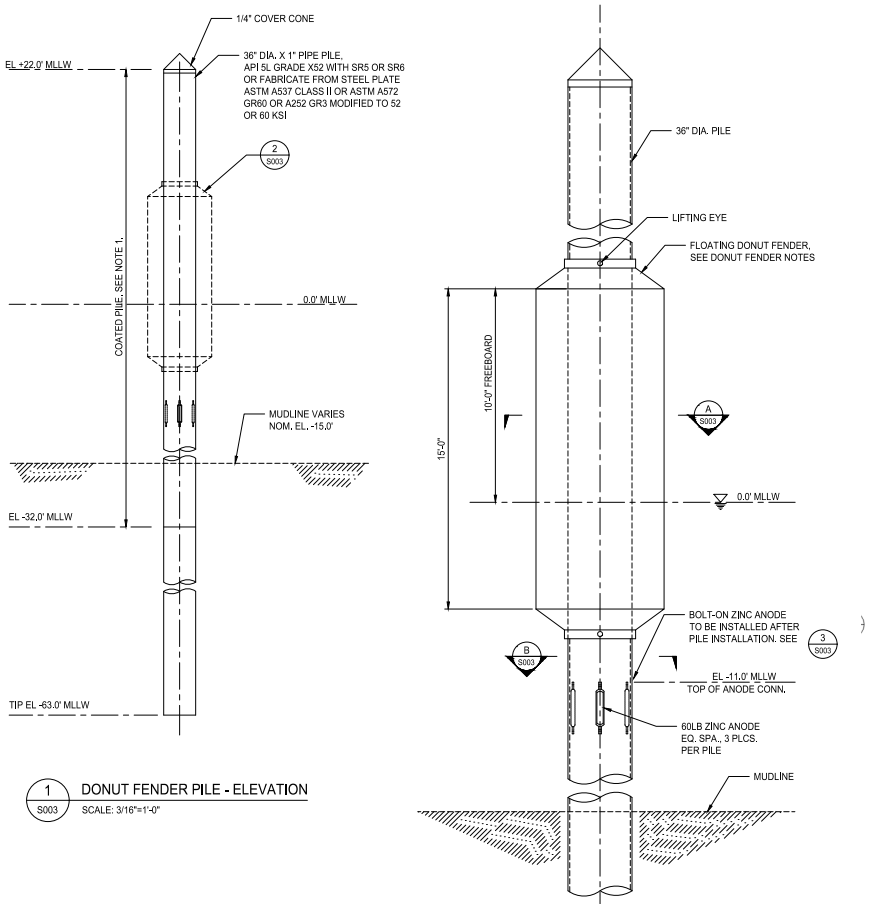

Figure 1-1: Proposed Donut Fender Pile

2 Introduction – Purpose of Report

COWI Marine North America (COWI) was retained by Water Emergency Transportation Agency (WETA) in order to design donut fender piles for the Alameda Harbor Bay Facility. The recommended maximum berthing velocity is based on surrounding Bay Area terminals and their design basis. The recommended velocity will be used in order to determine the minimum length and size of pile. The capacity of the new piles will be calculated in order to ensure the new piles do not fail geotechnically and structurally.

The following objectives were defined for this report:

- Provide structural and geotechnical analysis and design to determine the required lengths of the new donut fender piles at the terminal.
- Provide capacity check of the new Harbor Bay Steel Pipe Piles against berthing demands expected at the terminal
- Provide written description and sketches of the improvements to be used for permitting of the project.

Figure 2-2-1: Alameda Harbor Bay Ferry Terminal

2.1 Assumptions Used for Design

The following assumptions were made as part of this report:

- The capacity of the steel float and or other structural component on the float has not been check.
- The hull capacity of the design vessels has not been checked. It is assumed the vessels will impact the donut fenders prior to berthing on float.
- Results presented are preliminary and are based on assumed geotechnical properties noted in available past projects and DDMO data. It is recommended that a site-specific geotechnical exploration be performed to support the final design.
- Donut Fender piles will not be designed/Checked for mooring. Piles are not to be used for mooring.

2.2 Terminal History

The Harbor Bay Ferry Terminal is located in Alameda, CA at the western shore of Harbor Bay Isle just south of the Main Island Alameda in the San Francisco Bay. The pier is oriented in a general east-west direction with the landside at the eastern end of the pier. The north side of the pier is more exposed to the environment (waves/wind) when compared to the south side.

The ferry terminal is composed of a fixed pier with two spans, a floating barge, and an aluminum truss gangway connecting the fixed pier to the floating barge.

The terminal was originally constructed in the early 1990's. In 2004 two of the five piles failed, closing the facility for several months while repairs were complete. New 24" diameter guide piles were installed in the late summer of 2004.

In 2011, the two 24" diameter inboard piles failed. On June 17, 2011, Marine Express, Inc. installed two new piles of 30" diameter with 1" wall thickness to replace the two damaged inboard piles. The total length of these two new piles are 60 feet measured from top of pile EL +19' (MLLW) to tip at EL -41' (MLLW). The three outboard 24" diameter with varying thickness were left as is. On August 01 2011, Gerwick provided structural capacity check for the inboard and outward piles. The "Pile Replacement' Report Dated August 1, 2011 will be used as a reference document for this report. In 2015, the three 24" outboard piles were replaced with 30" diameter piles with varying tip elevations from EL -57.0 to EL -61.0 MLLW.

Figure 2-2-2: Harbor Bay Ferry Terminal Site Location

3 Design Criteria for Piles

3.1 Vessel

The governing vessel used to assess and design the donut fender piles is the largest vessel operated by WETA, the NB450.

NB450 Design Vessel Parameters

- Length: 39.93m (131 ft.)
- Beam Width: 12.0m (39.33 ft.)
- Average Draft: 1.52m (5.0 ft.)
- Freeboard: 2.47m (8.0 ft.)
- Displacement, Full load: 225.1 MT (496 Kips)
- Recommended velocity: 0.71 Knots (1.2 ft/sec)

3.2 Site Parameters

All elevations are noted in MLLW.

- Top of Pile EL +22.0 feet
- Tip of Pile EL -63.0 feet
- MWWH+SLR+ FB EL +16.0 feet (Point of contact on donut fender)
- MHHW EL +6.6 feet
- Mudline Nom. EL -15.00 feet, varies
- Sea Level Rise (SLR) +1.39 feet (Derived from Sea Plane Lagoon Terminal Project and Mission Bay Ferry Landing Project)

3.3 Berthing Demands

The berthing process consist of a vessel approaching the berth facility, generally under an angle with a certain approach velocity defined as the velocity perpendicular to the face of the facility. The impact of the vessel in motion on the facility must be absorbed in such a way that no damage occurs to vessel or the pile. The berthing demands of the design vessels were calculated using a deterministic method in accordance with the following codes.

- California Building Code, Marine Oil Terminals (MOTEMS), Chapter 31, 2011
- International Navigation Association, PIANC, Guidelines for the Design of Fender Systems, 2002

The design berthing energy of the vessel is calculated as follows, per MOTEMS, 2011 "Berthing Loads"

$$E_{Demand} = \tfrac{1}{2} x\ (M/g) \times V_n^2 x C_b x C_m$$

Where:

E_{Demand} = Required Energy to be absorebed by the float
W = Total Displacement of Vesse
g = Acceleration due to Gravity (32.2ft/sec^2)
V_n = Approach Velocity (1.2 ft/sec (0.71 Knot))
C_b = Berthing Coefficient (0.66)
C_m = Effective Virtual Mass Coefficient (1.50)

Vessel	Max Displacement	Approach Velocity		Energy Demand
	Kips	ft/sec	knot	k-ft
NB450	496	1.2	0.71	15.02

For detailed calculations, see Appendix B.

3.4 Material Properties

- Pipe Piles X52 Grade 52

3.5 Design Codes

- UFC 4-152-01 Design of Piers or wharves
- Steel Construction Manual - AISC 13th Ed.

3.6 Structural

The structural capacity of the steel piles was calculated per AISC 16th Ed. Part 16 "Specification and Codes", Chapter B "Design Requirements and its corresponding Chapters.

3.7 Geotechnical

The geotechnical capacity of the steel pipe pile was determined per the User's Manual for LPile 2013, "A Program to Analyze Deep Foundation Under Lateral Loading", April 2014. Isenhoward, Wang.

The geotechnical capacities of the piles were calculated per LPILE with Service Loading with a minimum Factor of Safety of 2.0 applied.

3.8 Load Factor Combinations

The following design code combinations were considered:

1. LC 01 – 1.0 Berthing
2. LC 02 – 1.6 Berthing

Note that piles have not been designed for mooring loads.

Appendix A – Drawings

See IFB 20-002 Volume 3 - Appendix B Drawings

Appendix B – Calculations

Berthing Calculations

Steel Pipe Pile Structural Capacity

Geotechnical Assessment

COWI NA, Inc.
1300 Clay Street, 7th FL
Oakland, CA 94612

Project: A133168
Subject: Harbor Bay Pile Design
36" Donut Fender Pile

Date: 03-09-2020
Design By: JRVS
Checked By: AESP

Berthing Calculations for Current Vessels

The following Equations were taken from the updated 2016 California Building Code: MOTEMS Division 3, Section 3103F.6 Berthing Loads.

Codes

2016 California Building Code - MOTEMS
Safe Berthing and Mooring from Trellebog, Fentek Catalog
Pianc - 2002

Assumptions:

Ferry Vessel: NB450

Site Conditions	Favorable (Table 31F-3-10)	
	Wind Speed	<38 knots
	Significant Wave Height	<6.5 ft
	Current Speed	<2 knots
Berthing Angle	10 degrees (for Vessels Less than 10, 000 DWT) Table 31F-3-11	

Variables

L_{OA}	=	131.00	ft	Overall length
L_{BP}	=	131.00	ft	Length between perpendiculars
B	=	39.33	ft	Extrem breadth, Beam
D	=	5.00	ft	Summer draft (Design)
d_{actual}	=	5.00	ft	Actual arrival draft of the vessel
DT	=	225.00	MT	Metric tonnes - Per General Arrangments
DT	=	496.01	kips	Fully loaded displacement of the Vessel
V_n	=	1.2	ft/sec	Max Allowable Berthing Velocity
		0.71	Knots	
g	=	32.2	ft/sec	Acceleration due to gravety
C_c	=	1		Configuration coefficient (Open berths & corners of piers) 1.0 for open berths and corners of piers 0.8 for solid piers with paralled apporach
C_g	=	1		Geometric coefficient 1.0 for broadside berthing 0.95 for quarter point berthing
C_d	=	1		Deformation coefficient 1.0 for hard fenders 0.9 for soft fenders
ρ_{sw}	=	1.025	tonne/m^3	Specific weight of sea water
a	=	32.75		Distance between the vessel's center of gravity and the point of contact on the vessel's side, projected onto the vessel's longitudinal axis

COWI NA, inc.
1300 Clay Street, 7th FL
Oakland, CA 94612

Project: A133168
Subject: Harbor Bay Pile Design
36" Donut Fender Pile

Date: 03-09-2020
Design By: JRVS
Checked By: AESP
Page 2 of 3

Weight of Vessel on Arrival

$W = (d_{actual}/D)*DT$

$= 496.01$ Kips

Berthing Energy

$E_{vessel} = (1/2)x(W/g)x(V_n^2)$ **Eq 3-15**

$= 11.27$ Kip-ft

Berthing Coefficient

$C_b = C_e*C_g*C_d*C_c$ **Eq 3-17**

where Eccentricity coeffifient is equivalent to C_e

$C_e = k^2/(a^2+k^2)$ **Eq 3-19**

$k = [0.19*(C_b)+0.11]*L_{pp}$ **Fentek Catalog, pg 78**

$C_b = M_D/(L_{pp}*B*D*\rho_{sw})$ **Fentek Catalog, pg 77**

$M_D = DT/g$ Displacement

$M_D = 225.0$ Ton

$C_B = 1.30$

$k = 46.78$ ft

$C_e = 0.67$

$C_b = C_e*C_g*C_d*C_c$

$= 0.65$

Mass Effective Coefficient

$C_m = 1+2*(d_{actual}/B)$ **Eq 3-20**

$= 1.50$

Energy Absorbed by the System

$E_{system} = 1/2*C_b*C_m*E_{vessel}*V^2$

$= 10.81$ k-ft

$E_A = Fs*E_{fender}$

$Fs = 1.25$ FS between 1 to 2. *Pile will have a FS=2.0 for Geotechnical lateral capacity.

$= 13.51$ k-ft

9.97 kN-m

Fender Demand has a tolerance of +/- 10%

$E_A = Fs*E_{fender}/0.90$

$= 15.02$ k-ft

Assume a specifications Donut Fenders

$E_{fender} = 78.80$ k-ft

$R_{fender} = 254.80$ Kips

Contact Length

$L_c = E_A/E_{fender}*6'$

1.72 ft

$R = L_c/2ft*R_{fender}$

50.20 Kips per unit length

\\cowi.net\projects\A130000\A133168\DATA\Calc\Donut Fender Piles\Harbor Bay Ferry Donut Fender Piles

COWI NA, Inc.
1300 Clay Street, 7th FL
Oakland, CA 94612

Project: A133168
Subject: Harbor Bay Pile Design
36" Donut Fender Pile

Date: 03-09-2020
Design By: JRVS
Checked By: AESP

OCEAN GUARD MONOPILE DONUT FLOATING FENDER									
EXTRA HIGH CAPACITY									
FENDER DIAMETER		PILE DIAMETER		FLAT LENGTH		ENERGY ABSORPTION		REACTION FORCE	
FEET	METERS	FEET	METERS	FEET	METERS	FT-KIPS	TON-M	KIPS	TON
4.5	1.4	2	0.6	2	0.6	10	1.4	44	20.0
4.5	1.4	2	0.6	3	0.9	15	2.1	66	29.9
4.5	1.4	2	0.6	4	1.2	20	2.8	88	39.9
4.5	1.4	2	0.6	5	1.5	25	3.5	110	49.9
4.5	1.4	2	0.6	6	1.8	30	4.1	132	59.9
4.5	1.4	2	0.6	7	2.1	35	4.8	154	69.9
4.5	1.4	2	0.6	8	2.4	40	5.5	176	79.8
5	1.5	2.5	0.8	2	0.6	12	1.7	51	23.1
5	1.5	2.5	0.8	3	0.9	17	2.4	77	34.9
5	1.5	2.5	0.8	4	1.2	23	3.2	103	46.7
5	1.5	2.5	0.8	5	1.5	29	4.0	128	58.1
5	1.5	2.5	0.8	6	1.8	35	4.8	154	69.9
5	1.5	2.5	0.8	7	2.1	40	5.5	180	81.6
5	1.5	2.5	0.8	8	2.4	46	6.4	205	93.0
6	1.8	3	0.9	2	0.6	18	2.5	59	26.8
6	1.8	3	0.9	3	0.9	26	3.6	88	39.9
6	1.8	3	0.9	4	1.2	35	4.8	117	53.1
6	1.8	3	0.9	5	1.5	44	6.1	147	66.7
6	1.8	3	0.9	6	1.8	53	7.3	176	79.8
6	1.8	3	0.9	7	2.1	62	8.6	205	93.0
6	1.8	3	0.9	8	2.4	70	9.7	234	106.1
7	2.1	3.5	1.1	3	0.9	37	5.1	99	44.9
7	2.1	3.5	1.1	4	1.2	49	6.8	132	59.9
7	2.1	3.5	1.1	5	1.5	62	8.6	165	74.8
7	2.1	3.5	1.1	6	1.8	74	10.2	198	89.8
7	2.1	3.5	1.1	7	2.1	87	12.0	231	104.8
7	2.1	3.5	1.1	8	2.4	99	13.7	264	119.8
7.5	2.3	4	1.2	3	0.9	41	5.7	110	49.9
7.5	2.3	4	1.2	4	1.2	55	7.6	147	66.7
7.5	2.3	4	1.2	5	1.5	69	9.5	183	83.0
7.5	2.3	4	1.2	6	1.8	82	11.3	220	99.8
7.5	2.3	4	1.2	7	2.1	96	13.3	256	116.1
7.5	2.3	4	1.2	8	2.4	110	15.2	293	132.9
8.25	2.5	4.5	1.4	3	0.9	50	6.9	121	54.9
8.25	2.5	4.5	1.4	4	1.2	66	9.1	161	73.0
8.25	2.5	4.5	1.4	5	1.5	83	11.5	201	91.2
8.25	2.5	4.5	1.4	6	1.8	100	13.8	242	109.8
8.25	2.5	4.5	1.4	7	2.1	116	16.0	282	127.9
8.25	2.5	4.5	1.4	8	2.4	133	18.4	322	146.1
9	2.7	5	1.5	3	0.9	59	8.2	132	59.9
9	2.7	5	1.5	4	1.2	79	10.9	176	79.8
9	2.7	5	1.5	5	1.5	99	13.7	220	99.8
9	2.7	5	1.5	6	1.8	119	16.5	264	119.8
9	2.7	5	1.5	7	2.1	138	19.1	308	139.7
9	2.7	5	1.5	8	2.4	158	21.9	352	159.7

** Actual values for above sizes may vary +/- 15% due to variations in materials, speed of compression, temperatures and tolerances.*

The fender performance is engineered at 60% foam compression. The monopile deflection provides additional energy absorption for the same reaction force rating.

http://www.marinefendersintl.com/properties/OCEAN%20GUARD%20FOAM-FILLED%20MONOPILE%20FLOATING%20DONUT%20MARINE%20FENDER%20EHC.pdf

\\cowi.net\projects\A130000\A133168\DATA\Calc\Donut Fender Piles\Harbor Bay Ferry Donut Fender Piles

CLIENT	Water Emergency Transportation Authority (WETA)
PROJECT	Alameda Harbor Bay Donut Fender Piles
JOB NO.	A133168
PREPARED	JRVS
CHECKED	AESP
APPROVED	JMC
ISSUE NO.	1
DATE OF ISSUE	02-11-2020

COWI
ADDRESS COWI Marine North America
1300 Clay St 7th Floor
Oakland, CA 94612
TEL (510) 839-8972
WWW cowi-na.com

Steel Pile Capacity- Donut Fender Piles

Notes

Equation used are found in the 14th edition of the AISC Steel Construction Manual. Units are in noted in the equations. Nomimal thickness of pile t = 1.0"

Variables

$E := 29000ksi$		Modulus of elasticity
$t := 1.0in$		Wall thickness (No corrosin loss due to anodes and paint coating)
$D := 36in$		Outside diameter (No corrosin loss due to anodes and paint coating)
$El := 16ft$		Vesel contact elevation
$ELf := -41ft$		Point of fixity
$MHHW := 2.51ft$		Mean Higher High Water
$L_b := 672in$		member length MHHW+SLR+Point of Impact (Point of Fixity to Vessel Contact)
$F_y := 52ksi$		Yield stress
$K := 2.1$		Effective length factor (cantilever) - Ideal condition
$L_v := 168in$		Distance from maximum shear stress to zero shear stress
LRFD	ASD	
$\phi_v := 0.90$	$\Omega_v := 1.67$	Factors for shear capacity per AISC 14th Ed, Ch G1
$\phi_b := 0.90$	$\Omega_b := 1.67$	Factors for bending capacity per AISC 14th Ed Ch F1
$\phi_c := 0.90$	$\Omega_c := 1.67$	Factors for compression capacity per AISC 14th Ed Ch E1
$\phi_t := 0.90$	$\Omega_t := 1.67$	Factors for tension capacity per AISC 14th Ed Ch D2
$\phi_T := 0.90$	$\Omega_T := 1.67$	Factors for torsion capacity per AISC 14th Ed Ch H3

Section Properties

$A_g := \pi \cdot t \cdot (D - t)$	$A_g = 0.8\,ft^2$	gross area
$Z := \frac{D^3}{6} - \frac{(D - 2 \cdot t)^3}{6}$	$Z = 1225 \cdot in^3$	plastic section modulus
$I := \pi \cdot \frac{D^4 - (D - 2 \cdot t)^4}{64}$	$I = 16851 \cdot in^4$	moment of inertia

$S := 2\frac{I}{D}$ $\quad S = 936 \cdot in^3$ elastic section modulus

$r := \sqrt{\frac{I}{A_g}}$ $\quad r = 12.4 \cdot in$ radius of gyration

$C := \frac{\pi \cdot (D - t)^2 \cdot t}{2}$ $\quad C = 1924.2 \cdot in^3$ torsional shear constant

Moment Capacity per AISC 14th Edition, Ch F8

Define slenderness parameters

$\lambda := \frac{D}{t} = 36$

$\lambda_{pm} := 0.07 \cdot \frac{E}{F_y} = 39.04$ limiting width-thickness ratio for compact section in flexure per AISC 14th Ed, Table B4.1

$\lambda_{rm} := 0.31 \cdot \frac{E}{F_y} = 172.88$ limiting width-thickness ratio for noncompact section in flexure per AISC 14th Ed, Table B4.1

Calculate moment capacity based on slenderness

$x_b := F_y \cdot Z = 5910 \cdot kip \cdot ft$ AISC 14th Ed eqn (F8-1)

$y_b := \left[\frac{0.021 \cdot E}{\left(\frac{D}{t}\right)} + F_y\right] \cdot S = 5376 \cdot kip \cdot ft$ AISC 14th Ed eqn (F8-2)

$F_{cr} := \frac{0.33 \cdot E}{\frac{D}{t}} = 285233\ psi$ AISC 14th Ed eqn (F8-4)

$z_b := F_{cr} \cdot S = 26733 \cdot kip \cdot ft$ AISC 14th Ed eqn (F8-3)

$M_n := \begin{cases} x_b & \text{if } (\lambda \le \lambda_{pm}) \\ y_b & \text{if } (\lambda_{pm} < \lambda \le \lambda_{rm}) \\ z_b & \text{otherwise} \end{cases} = 5910 \cdot kip \cdot ft$

$\phi_b \cdot M_n = 4779 \cdot kip \cdot ft$

$\frac{M_n}{\Omega_b} = 3160 \cdot kip \cdot ft$

Shear Capacity per AISC 14th Edition Chapter G6

F_{cr} for shear is the larger of x & y but must be less than z

$x_b := \frac{1.09E}{\sqrt{\frac{L_v}{D}}\left(\frac{D}{t}\right)^{\frac{5}{4}}} = 208791.2\ psi$ $\quad y_b := \frac{0.78 \cdot E}{\left(\frac{D}{t}\right)^{\frac{3}{2}}} = 164722.2\ psi$

but must be less than $\quad z_b := 0.6 \cdot F_y = 3.12 \times 10^4 \cdot psi$

$$F_{crv} := \begin{cases} \text{return } x_s & \text{if } x_s > y_s \wedge x_s < z_s = 3.12 \times 10^4 \cdot psi \\ y_s & \text{if } y_s > x_s \wedge y_s < z_s \\ z_s & \text{otherwise} \end{cases}$$

$V_n := \frac{F_{crv} \cdot A_g}{2} = 1715.3 \cdot kip$ AISC 14th Ed (G6-1)

$\phi_v \cdot V_n = 1544 \cdot kip$ $\frac{V_n}{\Omega_v} = 1027 \cdot kip$

Compression Capacity per AISC 14th Edition Chapter E

Define compression slenderness parameter

$\lambda = 36$ reference moment capacity calculations

$\lambda_{rc} := \frac{0.11 \cdot E}{F_y} = 61.35$ limiting width-thickness ratio for slender-element section per AISC 14th Ed, B4.1

$F_e := \frac{\pi^2 \cdot E}{\left(\frac{K \cdot L_b}{r}\right)^2} = 2.2 \times 10^4 \, psi$ elastic critical buckling stress, AISC 14th Ed (E3-4)

$$Q := \begin{cases} 1 & \text{if } \lambda \le \lambda_{rc} \\ \left[\left[\frac{0.038 \cdot E}{F_y \cdot \left(\frac{D}{t}\right)} + \frac{2}{3}\right]\right] & \text{if } \left(\lambda < 0.45 \cdot \frac{E}{F_y}\right) \wedge \left(\lambda > \lambda_{rc}\right) \end{cases}$$

1.0 for members with compact and noncompact sections

AISC 14th Ed (E7-19)

$Q = 1$

Determine Fcr for

$$F_{crc} := \begin{cases} \left[Q \cdot \left(0.658^{\frac{Q \cdot F_y}{F_e}}\right) \cdot F_y\right] & \text{if } F_e \ge 0.44 \cdot Q \cdot F_y \\ \left(0.877 \cdot F_e\right) & \text{if } F_e < 0.44 \cdot Q \cdot F_y \end{cases}$$

AISC 14th Ed (E7-2)

AISC 14th Ed (E7-3)

$F_{crc} = 19316.2 \, psi$

$P_{nc} := F_{crc} \cdot A_g = 2124 \cdot kip$ AISC 14th Ed (E7-1)

$\phi_c \cdot P_{nc} = 1912 \cdot kip$ $\frac{P_{nc}}{\Omega_c} = 1272 \cdot kip$

$\frac{K \cdot L_b}{r} = 114$ slenderness ratio, should be less than 200

Tension Capacity per AISC 14th Ed Chapter D

$P_{nt} := F_y \cdot A_g = 5718 \cdot kip$ AISC 14th Ed (D2-1)

$\phi_t \cdot P_{nt} = 5148 \cdot kip$ $\frac{P_{nt}}{\Omega_t} = 3424 \cdot kip$

Summary

LRFD	ASD
$\phi_b \cdot M_n = 4779 \cdot kip \cdot ft$	$\frac{M_n}{\Omega_b} = 3180 \cdot kip \cdot ft$
$\phi_v \cdot V_n = 1544 \cdot kip$	$\frac{V_n}{\Omega_v} = 1027 \cdot kip$
$\phi_c \cdot P_{nc} = 1912 \cdot kip$	$\frac{P_{nc}}{\Omega_c} = 1272 \cdot kip$
$\phi_t \cdot P_{nt} = 5146 \cdot kip$	$\frac{P_{nt}}{\Omega_t} = 3424 \cdot kip$

Pile Demand:

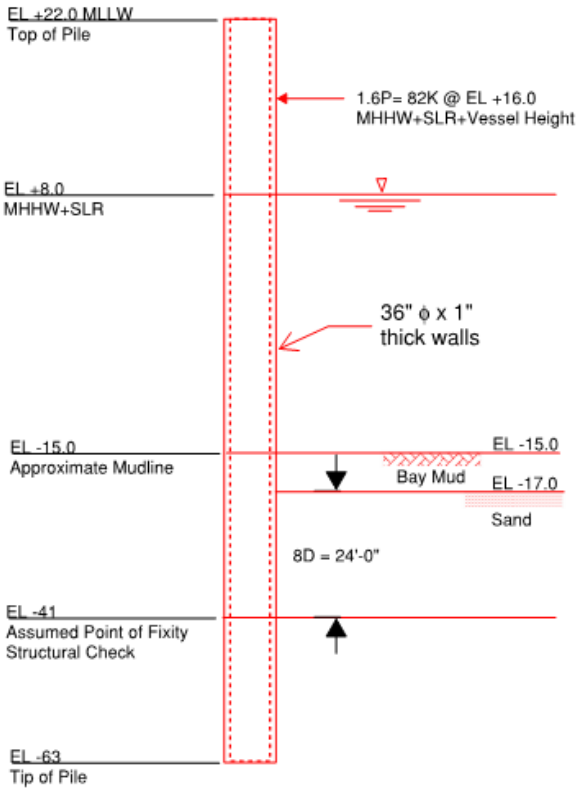

Structural Moment and Shear Check:

Mu = L*P → 57 ft x 82 kips = 4674 k-ft

D/C = 0.98 : OKAY

Vu = 250 kips (LPile)

D/C = 0.16 : OKAY

Per LPILE analysis, pile instability governs due to factored load.
Minimum tip elevation to satisfy pile stability @ EL -63.0

Energy Capacity of Pile

Pile Stiffness, k: $k_{PILE} = P_g/D$ =82.4 kips/ (15 in/(12in/ft)) =65.92 k/ft

The controlling reaction as noted for the above is from Pile Geotech.

Max Pile deflection at contact: D = 1.25 ft

Total Pile Energy Capacity: ½*(P_{MAX})*D = **51.5 k-ft > Vessel Energy Demand 15.02 k-ft: OKAY**

Energy Capacity of Donut Fender

Ocean Guard: Contact Height = 8 ft; Energy = 70 kip-ft; Reaction = 234 Kips

Forces per foot of Fender: Energy = 8.75 kip-ft/ft; Reaction = 29.25 kips/ft

OCEAN GUARD **MONOPILE DONUT FLOATING FENDER**									
EXTRA HIGH CAPACITY									
FENDER DIAMETER		**PILE DIAMETER**		**FLAT LENGTH**		**ENERGY ABSORPTION**		**REACTION FORCE**	
FEET	**METERS**	**FEET**	**METERS**	**FEET**	**METERS**	**FT-KIPS**	**TON-M**	**KIPS**	**TON**
4.5	1.4	2	0.6	2	0.6	10	1.4	44	20.0
4.5	1.4	2	0.6	3	0.9	15	2.1	66	29.9
4.5	1.4	2	0.6	4	1.2	20	2.8	88	39.9
4.5	1.4	2	0.6	5	1.5	25	3.5	110	49.9
4.5	1.4	2	0.6	6	1.8	30	4.1	132	59.9
4.5	1.4	2	0.6	7	2.1	35	4.8	154	69.9
4.5	1.4	2	0.6	8	2.4	40	5.5	176	79.8
5	1.5	2.5	0.8	2	0.6	12	1.7	51	23.1
5	1.5	2.5	0.8	3	0.9	17	2.4	77	34.9
5	1.5	2.5	0.8	4	1.2	23	3.2	103	46.7
5	1.5	2.5	0.8	5	1.5	29	4.0	128	58.1
5	1.5	2.5	0.8	6	1.8	35	4.8	154	69.9
5	1.5	2.5	0.8	7	2.1	40	5.5	180	81.6
5	1.5	2.5	0.8	8	2.4	46	6.4	205	93.0
6	1.8	3	0.9	2	0.6	18	2.5	59	26.8
6	1.8	3	0.9	3	0.9	26	3.6	88	39.9
6	1.8	3	0.9	4	1.2	35	4.8	117	53.1
6	1.8	3	0.9	5	1.5	44	6.1	147	66.7
6	1.8	3	0.9	6	1.8	53	7.3	176	79.8
6	1.8	3	0.9	7	2.1	62	8.6	205	93.0
6	1.8	3	0.9	8	2.4	70	9.7	234	106.1

COWI

MEMO

ADDRESS COWI North America, Inc.
1300 Clay St.
7th Floor
Oakland, CA 94612
USA

TEL +1 510 839 8972
FAX +1 510 839 9715
WWW cowi.com

PAGE 1/2

TITLE Fender Pile Geotechnical Recommendations
Alameda Harbor Bay Ferry Terminal
DATE 21 February 2020
TO Jessica Rivas
COPY James Connolly
FROM Marnel Daway
PROJECT NO A133168

1 Executive Summary

Without direct exploratory boreholes, 36"Ø×1"fender piles at the Alameda Harbor Bay Ferry Terminal are recommended to have a tip elevation (el.) of at least -52.0' MLLW for lateral stability. Previously driven piles indicated refusal at around elevations -56.0' to -61.0'.

2 Geotechnical Information

Geotechnical information to assess the soil profile and properties are taken from the following documents:

- Bonaparte, R. and Mitchell, J.K., "The Properties of San Francisco Bay Mud at Hamilton Air Force Base, California," 1979.
- CLE Engineering, Inc, "Results of Sediment Sampling and Analyses, City of Alameda – Harbor Bay Ferry Dredging Project," July 13, 2010.
- McDonald, S.D., et. al., "Map Showing Thickness of Young Bay Mud, Southern San Francisco Bay, California, " 1978.
- US Geological Survey, "Cone Penetrometer Sounding ALC030", February 5, 2001.

Mudline at the fender piles is approximately at el. -15.0'. Based on the preceding information, the soil profile and properties at the project site can be guesstimated, as presented in Table 1.

\\cowi.net\projects\A130000\A133168\DATA\Calc\Donut Fender Piles\Alameda Harbor Bay Donut Fender Piles.DOCX

COWI

Table 1. Soil profile and properties.

Soil Description	Elevation [ft MLLW]		γ [pcf]	φ' [°]	s_u [psf]	k [pci]	ε_{50}
Bay Mud	Top Bottom	-15.0 -20.0	95	-	50	-	0.02
Sand	Top Bottom	-20.0 -	100	35	-	60	-

Notes: γ = saturated unit weight
φ' = effective friction angle
s_u = undrained shear strength
k = initial modulus of subgrade reaction
ε_{50} = strain at half the maximum stress on laboratory undrained compression tests of undisturbed samples

3 Lateral Pile Analyses

Fender piles are 36"Ø×1" steel pipe piles with steel yield stress (F_y) of 52 ksi. Top of pile will be at el. +19.0'. Piles would be impacted by a horizontal load of 51.5 kip (unfactored; 82.4 kip factored) at a contact elevation of +16.0'. Lateral pile analysis results using the LPILE program by Ensoft are presented in Table 2.

Table 2. Soil profile and properties.

Load Case	Lateral Load [kip]	δ_{max} [in]	M_{max} [kip-ft]	V_{max} [kip]
1	82.4	14.5	3218	209
2	51.5	8.35	1973	126

Notes: δ_{max} = maximum lateral deflection
M_{max} = maximum bending moment
V_{max} = maximum shear force

From the pile lateral behavior, the minimum required tip elevation was determined to be -52.0'. The lateral capacity was calculated to have a factor of safety of 2.84, sufficient for a target FS of 2.0.

4 Appendices

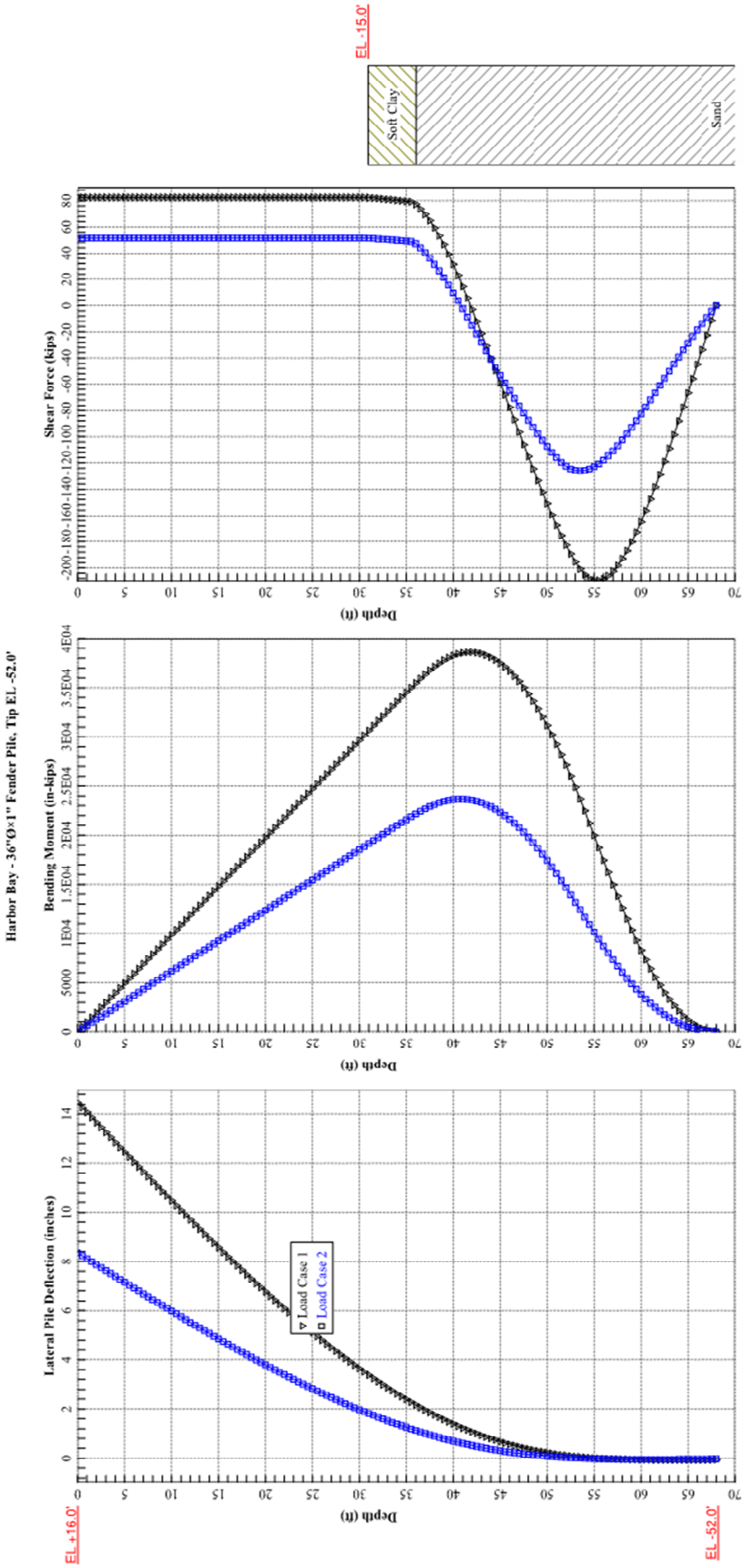
EL -15.0'
Soft Clay
Sand
Shear Force (kips)
Depth (ft)
Harbor Bay - 36"Ø×1" Fender Pile, Tip EL. -52.0'
Bending Moment (in-kips)
Depth (ft)
Lateral Pile Deflection (inches)
Load Case 1
Load Case 2
Depth (ft)
EL +16.0'
EL -52.0'

\\cov

COWI Marine North America
1300 Clay Street, 7th Floor
Oakland, CA 94612

A133168
WETA - Harbor Bay Ferry Terminal
Ultimate Lateral Load Capacity

2/21/2020
Designed: MGDY
Checked: -

Ultimate Lateral Pile Capacity, Fender Pile

Ultimate soil resistance per unit length of pile p_u and $p_{u,max}$ were calculated per recommendations of Reese and others as described in the LPILE Technical Manual (2013). Calculation of equivalent depth x follows the same reference.

Ø	36	in	Pile diameter
P_u	145	kip	Ultimate lateral load capacity (∑F)
	16	ft	Lateral load EL

EL	Depth	x	γ'	φ	S_u	p_u	$p_{u,max}$	ΔF	ΔM
[ft MLLW]	[ft]	[ft]	[pcf]	[°]	[psf]	[lb/ft]	[lb/ft]	[kip]	[kip-ft]
-15.0	0.0	0.0	31.0		100	900	2700		
-20.0	5.0	5.0	31.0		100	1615	2700	6	241
-20.0	5.0	5.0	61.0	35		6366	51285		
-42.8	27.8	27.8	61.0	35		153868	227988	1827	121888
-42.8	27.8	27.8	61.0	35		153868	227988		
-52.0	37.0	37.0	61.0	35		213333	299225	1688	122128

∑M	0.0	kip-ft	For equilibrium

Appendix C - Technical Specifications

SEE IFB 20-002 VOLUME 3 SPECIFICATIONS

WATER EMERGENCY TRANSPORTATION AUTHORITY (WETA)

ALAMEDA HARBOR BAY DONUT FENDER PILES

MAP TAKEN FROM GOOGLE EARTH

VICINITY MAP

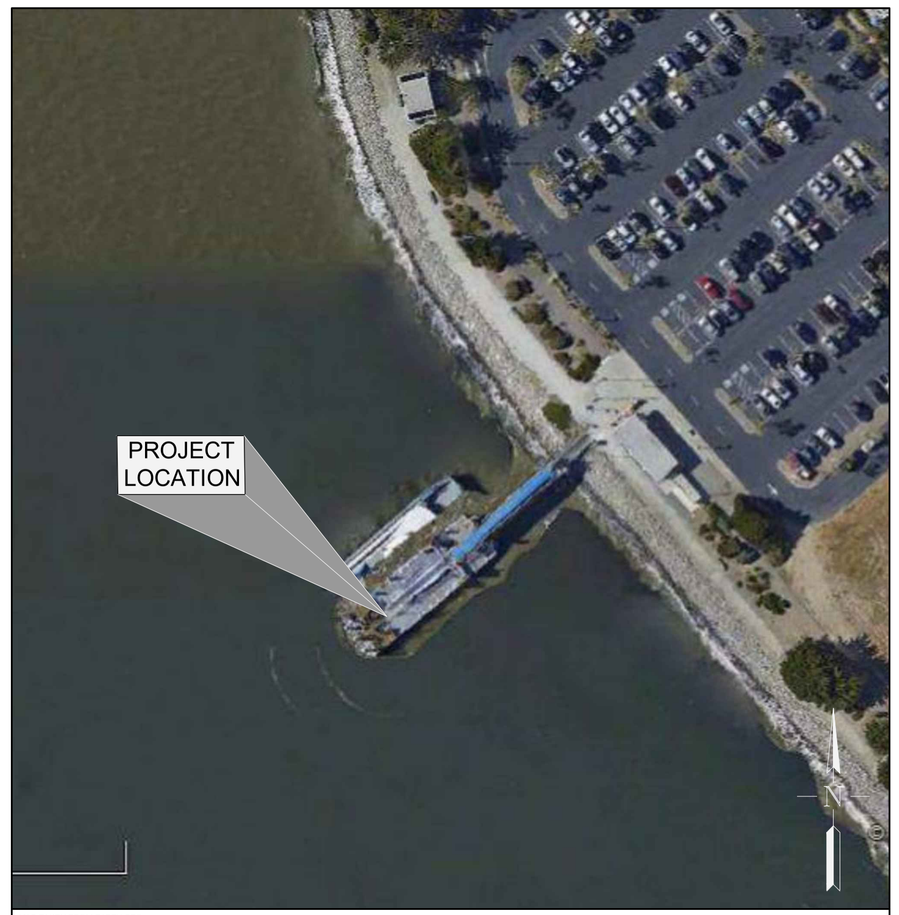

MAP TAKEN FROM EARTH PRO

LOCATION PLAN

DRAWING INDEX			
SHT. NO.	DRAWING NO.	DRAWING TITLE	REV.
1	G001	VICINITY MAP, LOCATION PLAN AND DRAWING INDEX	A
2	S001	GENERAL NOTES	A
3	S002	PASSENGER FLOAT DONUT FENDER PIPE PILES NEW CONSTRUCTION	A
4	S003	DONUT FENDER PILES	A

PROJECT DESCRIPTION

THE WORK TO BE COMPLETED UNDER THIS CONTRACT INCLUDES THE INSTALLATION OF STEEL PIPE PILES WITH DONUT FENDERS AT THE HARBOR BAY FERRY TERMINAL IN ALAMEDA. THE FERRY LANDING WILL REQUIRE INSTALLATION OF (2) 36-INCH STEEL PIPE GUIDE PILES WITH 6' NOMINAL OUTSIDE DIAMETER DONUT FENDERS.

REGISTERED PROFESSIONAL ENGINEER
JAMES P. CONNOLLY
C 64532
CIVIL
STATE OF CALIFORNIA

REV	DATE	DESCRIPTION	BY	CHK
A	05/08/2020	REQUEST FOR PROPOSAL	JRVS	AESP

CLIENT

WATER EMERGENCY TRANSPORTATION AUTHORITY

CONSULTANT

COWI
1300 Clay Street, 7th Flr
Oakland, CA 94612
Tel.: 510.839.8972
Fax: 510.839.9715
Website: www.cowi-na.com

PROJECT TITLE

ALAMEDA HARBOR BAY FERRY TERMINAL DONUT FENDER PILES

REQUEST FOR PROPOSAL

DRAWING TITLE

VICINITY MAP / LOCATION PLAN / DRAWING INDEX

SCALE	DESIGNED	APPROVED	
-	JRVS	JPC	
DRAWN	CHECKED	DATE	
NIF	AESP	03/01/2020	
PROJECT NO.	TASK NO.	SHEET NO.	REV.
A133168	001	G001	A

PLOTTED BY: NOEL FORTEZ PLOT DATE: 5/8/2020 2:32:29 PM
FILE LOCATION: O:\A130000\A133168\CAD\RFP DRAWINGS\A133168-G001.DWG

GENERAL

1. THE WORK SHOWN ON THESE DRAWINGS HAS BEEN DEVELOPED FOR THE ALAMEDA HARBOR BAY DONUT FENDER PILES.

2. GENERAL NOTES AND TYPICAL DETAILS APPLY TO ALL STRUCTURAL FEATURES, UNLESS NOTED OTHERWISE.

3. THE PROJECT SPECIFICATIONS FORM A PART OF THE CONTRACT DOCUMENTS.

4. SPECIFICATIONS, CODES, AND STANDARDS NOTED IN THE CONTRACT DOCUMENT SHALL BE IN THE LATEST EDITION, UNLESS NOTED OTHERWISE.

5. DIMENSIONS SHALL NOT BE SCALED FROM THE DRAWINGS.

DESIGN CRITERIA

AISC — AMERICAN INSTITUTE OF STEEL, INC. SPECIFICATION FOR STRUCTURAL STEEL BUILDINGS, CHICAGO, IL. AMERICAN INSTITUTE OF STEEL, INC. 2016.

ASCE — AMERICAN SOCIETY OF CIVIL ENGINEERS, ASCE/SEI STANDARD 7-10: MINIMUM DESIGN LOADS FOR BUILDINGS AND OTHER STRUCTURES, RESTON, VA; AMERICAN SOCIETY OF CIVIL ENGINEERS 2010.

AWS — AMERICAN WELDING SOCIETY, AWS D1.1/D1.1M:2010, STRUCTURAL WELDING CODE - STEEL, 22ND EDITION, MIAMI, FL; AMERICAN WELDING SOCIETY, 2010.

PIANC — WORKING GROUP 33 OF MARITIME NAVIGATION COMMISSIONS, GUIDELINES FOR DESIGN OF FENDER SYSTEMS: 2002, BRUSSELS BELGIUM: INTERNATIONAL NAVIGATION ASSOCIATION, 2002.

UFC — UNIFIED FACILITY CRITERIA, UFC-4-152-07, DESIGN SMALL CRAFT BERTHING FACILITIES, JULY 2009.

DATUM AND ELEVATIONS

1. VERTICAL DATUM

   A. ALL ELEVATIONS SHOWN IN THESE DRAWINGS ARE BASED ON MEAN LOWER LOW WATER (MLLW) UNLESS NOTED OTHERWISE. EL. 0.00 MLLW= EL. +0.23 NAVD88.

   B. MEAN LOW LOW WATER (MLLW) IS BASED ON TIDE EPOCH 1983-2001 MEASURED AT NATIONAL OCEANIC AND ATMOSPHERIC ADMINISTRATION (NOAA), TIDE STATION 9414750, ALAMEDA CA.

2. HORIZONTAL DATUM

   A. NAD83 (NA2011) CALIFORNIA STATE PLANE COORDINATE SYSTEM.

WATER LEVEL

LEVEL	ELEVATION (FEET)
HIGHEST ASTRONOMICAL TIDE	+7.98
MEAN HIGHER HIGH WATER (MHHW)	+6.60
MEAN LOWER LOW WATER (MLLW)	0.00
LOWEST ASTRONOMICAL TIDE	-1.94
DESIGN SEA LEVEL RISE	ADD 1.39 FT.

FERRY LANDING

FERRY LANDING CONSISTS OF ITS PIER, GANGWAY, STEEL FLOAT, CANOPIES, AND DONUT PILES.

1. VESSEL FLEET LIST

SAN FRANCISCO BAY FERRY FLEET
BAY BREEZE GEMINI CLASS BOATS HYDRUS CLASS BOATS SOLANO CLASS BOATS PERALTA VALLEJO NB450

APPROXIMATE GOVERNING VESSEL CHARACTERISTICS

BOAT	NB450
HULL TYPE	CATAMARAN
DISPLACEMENT (LONG TONS)	225.1
LENGTH AT WATERLINE (FEET)	131
BEAM (FEET)	39.33
PONTOON BEAM (FEET)	10.38
DRAFT (FEET)	5.0
RUB RAIL CAPACITY	25 KIPS (MAX)

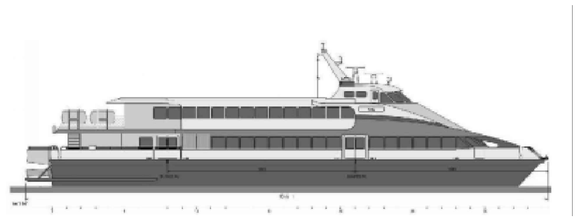

PROFILE

2. DESIGN LIFE AND LOADING

   A. DESIGN ANTICIPATED LIFE
      25 YEARS

   B. LOADS

   I. STEEL FLOAT, FLOAT GUIDE PILES AND DONUT FENDER PILES

      D DEAD LOADS - WEIGHT OF FIXED STRUCTURE AND COMPONENTS

      LB VESSEL BERTHING DESIGN CONDITION
      SPEED: 1.2 FPS DONUT FENDER.

      INCIDENT ANGLE: 10 DEGREES

      BERTHING POINT
      FORWARD OF MIDSHIP: LENGTH/4

REGISTERED PROFESSIONAL ENGINEER
JAMES P. CONNOLLY
C 64532
CIVIL
STATE OF CALIFORNIA

REV	DATE	DESCRIPTION	BY	CHK
A	05/08/2020	REQUEST FOR PROPOSAL	JRVS	AESP

CLIENT
WATER EMERGENCY TRANSPORTATION AUTHORITY

CONSULTANT
COWI
1300 Clay Street, 7th Flr
Oakland, CA 94612
Tel.: 510.839.8972
Fax: 510.839.9715
Website: www.cowi-na.com

PROJECT TITLE
ALAMEDA HARBOR BAY FERRY TERMINAL DONUT FENDER PILES

REQUEST FOR PROPOSAL

DRAWING TITLE
DESIGN CRITERIA

SCALE	DESIGNED	APPROVED	
-	JRVS	JPC	
DRAWN	CHECKED	DATE	
NIF	AESP	03/01/2020	
PROJECT NO.	TASK NO.	SHEET NO.	REV.
A133168	001	S001	A

PLOTTED BY: NOEL FORTEZ PLOT DATE:5/8/2020 2:32:34 PM
FILE LOCATION: O:\A130000\A133168\CAD\RFP DRAWINGS\A133168-S001.DWG

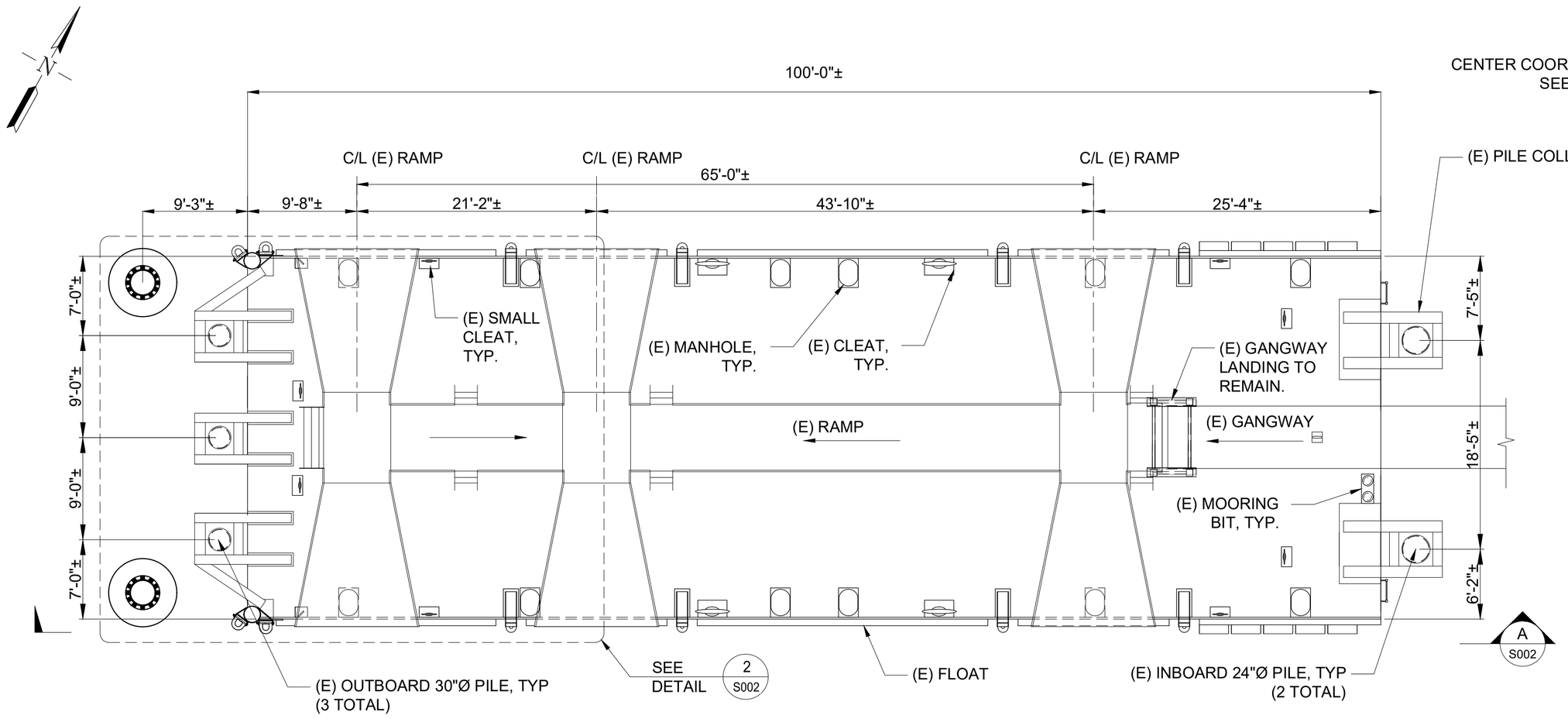

1 S002 **PLAN**
SCALE: 1/8" = 1'-0"

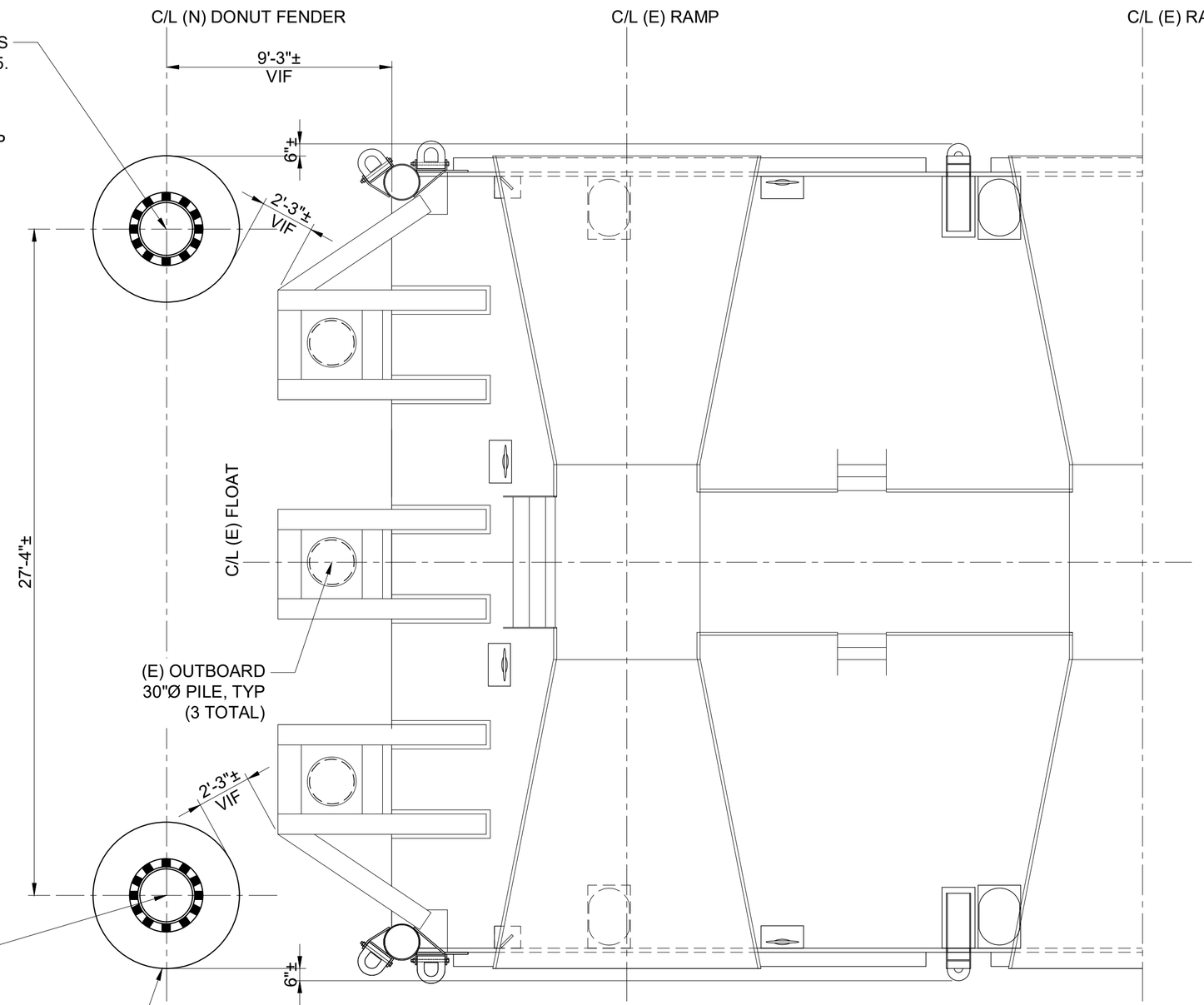

2 S002 **DETAIL**
SCALE: 1/4" = 1'-0"

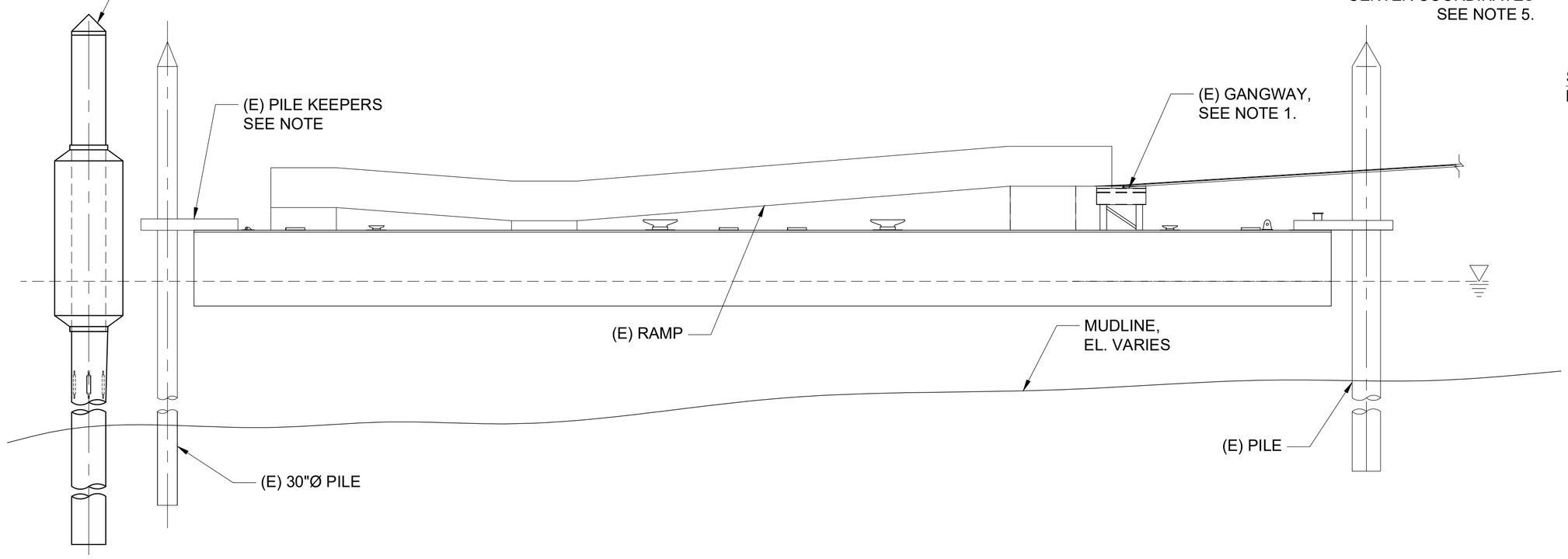

A S002 **SECTION**
SCALE: 1/8" = 1'-0"

NOTES:

1. GANGWAY AND RAMP RAILS NOT SHOWN FOR CLARITY.
2. SIZE OF DONUT FENDER PILE TO BE 36" DIAMETER, WITH 6FT NOMINAL OUTSIDE DIAMETER FENDER.
3. PROTECT IN PLACE EXISTING STRUCTURES.
4. INSTALLATION OF PILES SHALL TAKE PLACE IN THE APPROVED PILE DRIVING WINDOW SET BY REGULATORY AGENCIES (BCDC/RWQCB/NMF/USACE).
5. CONTRACTOR TO DETERMINE COORDINATES OF CENTER OF NEW FENDER PILES AND SUBMIT FOR REVIEW AND APPROVAL. SUBMITTAL TO INCLUDE SKETCH SHOWING COORDINATES AND FIELD VERIFIED OFFSETS BETWEEN END OF FLOAT PILE COLLARS AND FENDER LINE.

REGISTERED PROFESSIONAL ENGINEER JAMES P. CONNOLLY C 64532 CIVIL STATE OF CALIFORNIA

REV	DATE	DESCRIPTION	BY	CHK
A	05/08/2020	REQUEST FOR PROPOSAL	JRVS	AESP

CLIENT
WATER EMERGENCY TRANSPORTATION AUTHORITY

CONSULTANT
COWI
1300 Clay Street, 7th Flr
Oakland, CA 94612
Tel.: 510.839.8972
Fax: 510.839.9715
Website: www.cowi-na.com

PROJECT TITLE
ALAMEDA HARBOR BAY FERRY TERMINAL DONUT FENDER PILES

REQUEST FOR PROPOSAL

DRAWING TITLE
PASSENGER FLOAT
DONUT FENDER PIPE PILES
NEW CONSTRUCTION

SCALE	DESIGNED	APPROVED	
AS SHOWN	JRVS	JPC	
DRAWN	CHECKED	DATE	
NIF	AESP	03/01/2020	
PROJECT NO.	TASK NO.	SHEET NO.	REV.
A133168	001	S002	A

PLOTTED BY: NOEL FORTEZ PLOT DATE:5/8/2020 2:32:30 PM
FILE LOCATION: O:\A130000\A133168\CAD\RFP DRAWINGS\A133168-S002.DWG

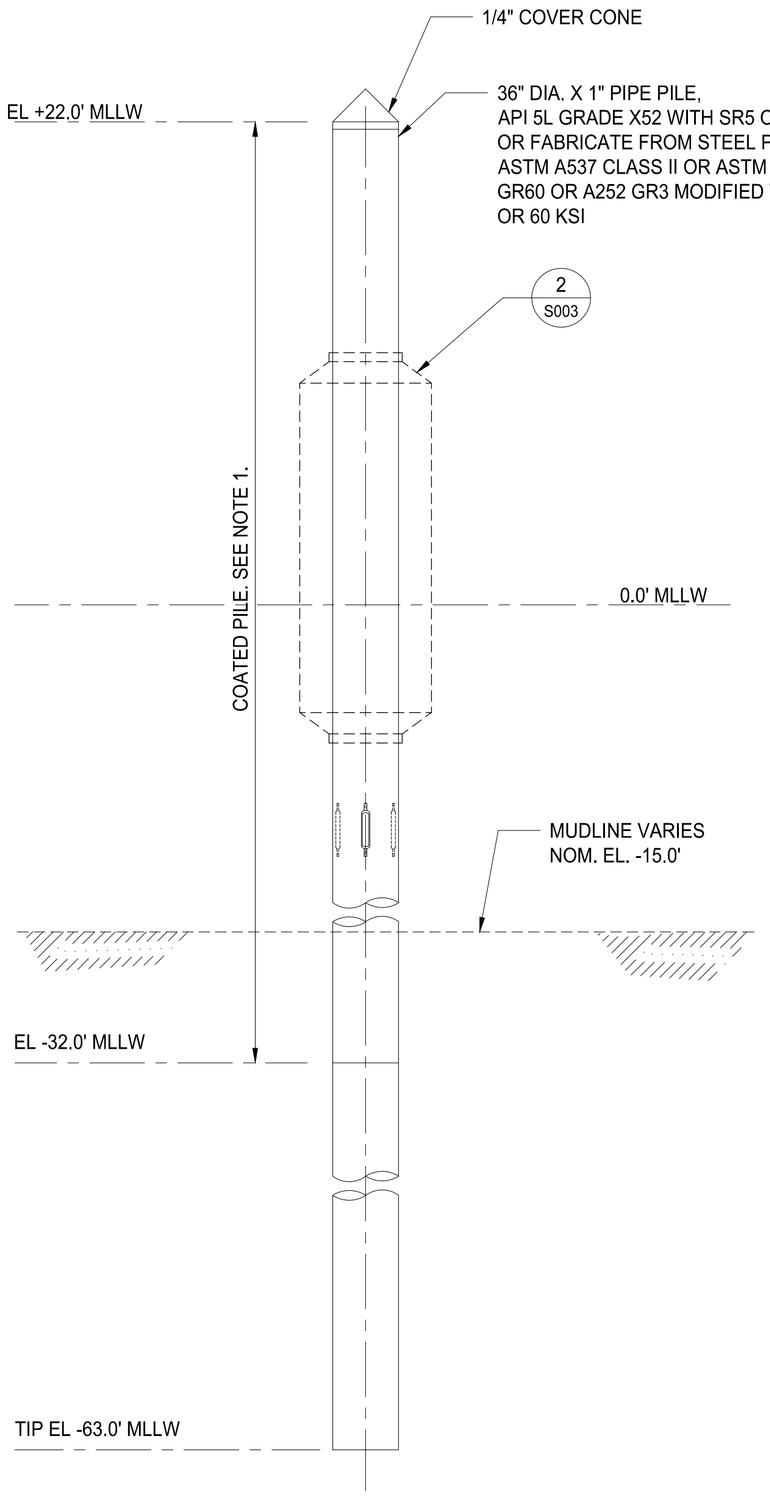

1 S003 **DONUT FENDER PILE - ELEVATION**

SCALE: 3/16"=1'-0"

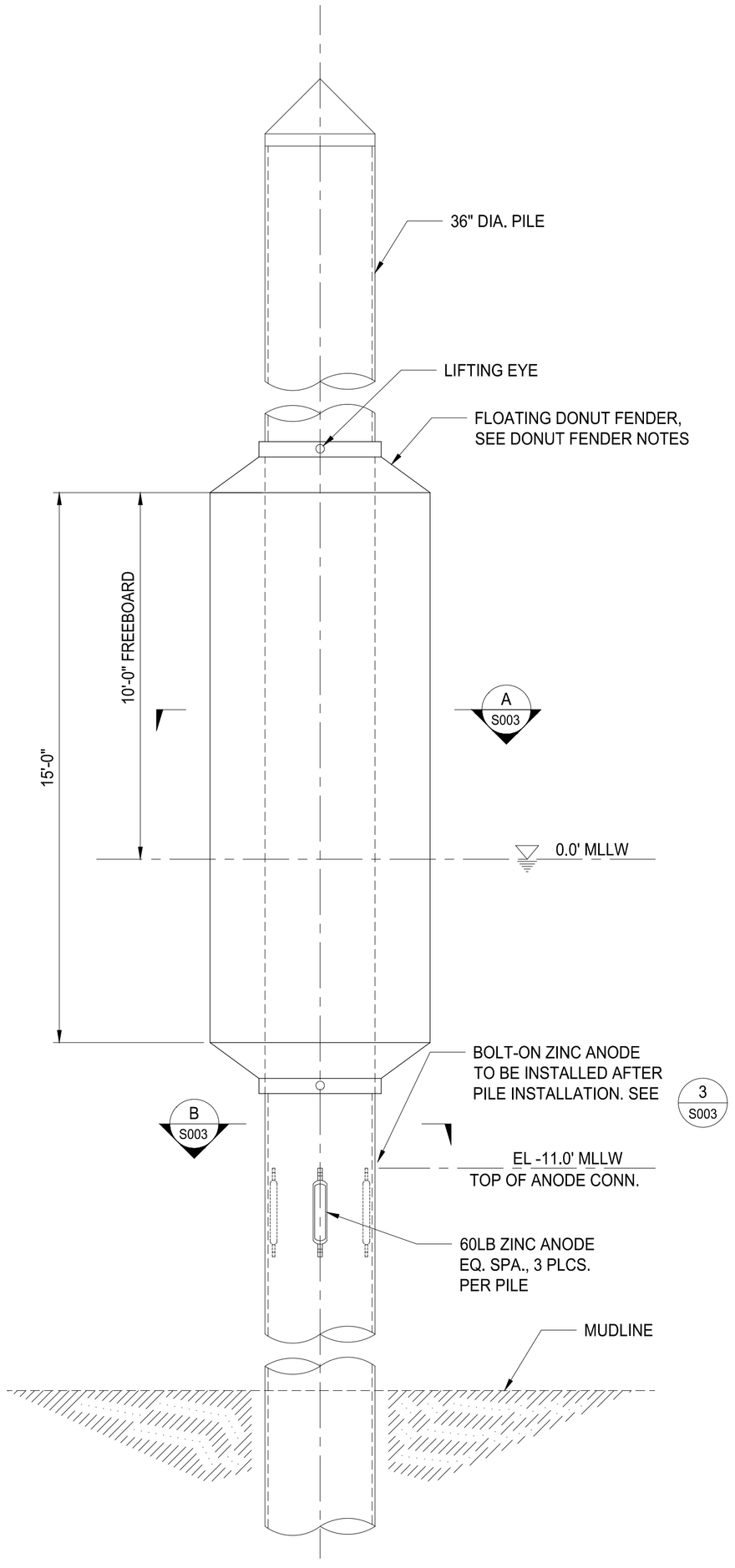

2 S003 **DETAIL - DONUT FENDER**

SCALE: 3/8"=1'-0"

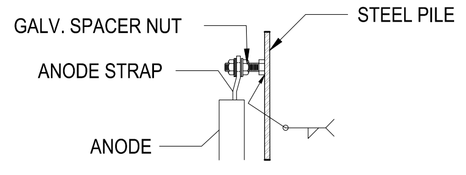

3 S003 **DETAIL ANODE CONNECTION, TOP AND BOTTOM**

SCALE: 1 1/2"=1'-0"

STEEL PILE NOTES:

1. SPIRAL, LONGITUDINAL, AND BUTT WELDS FROM 9'-6" BELOW MLLW TO THE PILE TOP MUST BE GROUND FLUSH WITH THE PILE FACE PRIOR TO COATING.
2. ZINC ANODES SHALL BE INSTALLED AFTER PILE INSTALLATION.
3. COAT THE UPPER PART OF THE PILE TO THE LENGTH SHOWN AND AS DESCRIBED IN THE SPECIFICATIONS.

DONUT FENDER PILES SHEET NOTES

1. PILE TIP SHALL BE OPEN ENDED. PILE TIP SHALL BE MACHINE CUT AND BEVELLED 30 DEGREES. WELDING SHALL CONFORM TO THE LATEST VERSION OF AWS D1.1 AND AWS D5.1.
2. ELEVATIONS SHOWN ARE BASED ON MLLW.
3. PILES SHALL BE DRIVEN TO INDICATED TIP ELEVATION.
4. PILES SHALL NOT BE SPLICED BELOW THE ELEVATION OF -11.5 FT MLLW.

CATHODIC PROTECTION NOTES

1. 60-LB ZINC ANODES SHALL BE AFFIXED TO EACH STEEL PILE IN THE APPROXIMATE LOCATIONS INDICATED. ANODES SHALL BE ATTACHED BY WELDING THE STEEL CORE STRAP TO THE PILE. METHODS AND MATERIALS FOR ANODE CORE STRAP TO PILE WELD ATTACHMENT SHALL BE SUBMITTED TO THE ENGINEER FOR REVIEW PRIOR TO THE WORK.
2. PILE COATING SHALL BE REMOVED AT WELD LOCATIONS PRIOR TO WELDING AND REPAIRED FOLLOWING COMPLETION OF WELDS IN ACCORDANCE WITH THE COATING MANUFACTURER'S RECOMMENDATIONS.
3. ALL WELDS SHALL BE COATED.
4. ZINC ANODES SHALL NOT BE COATED.

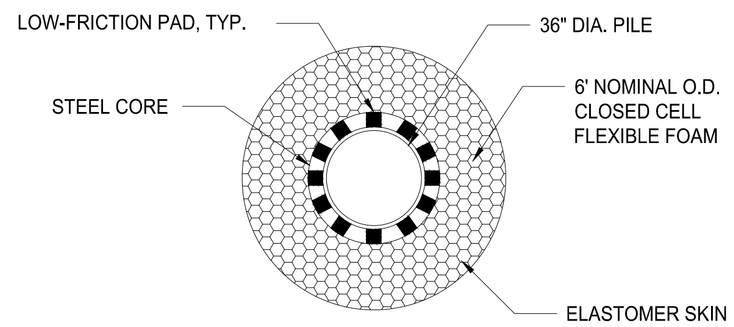

A S003 **SECTION**

SCALE: 3/8"=1'-0"

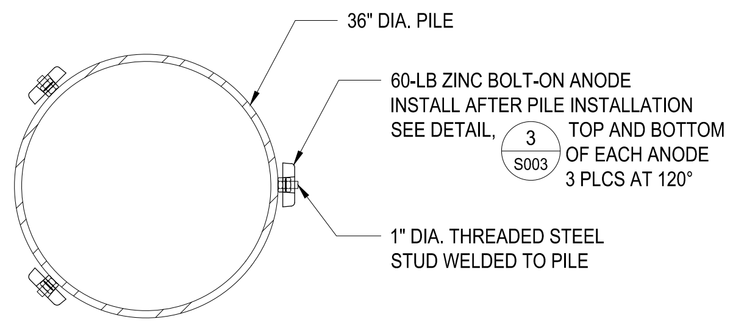

B S003 **SECTION**

SCALE: 3/4"=1'-0"

5. REPAIR ALL LOCATIONS WHERE COATING IS REMOVED OR DAMAGED IN ACCORDANCE WITH COATING MANUFACTURER'S RECOMMENDATIONS. MANUFACTURER SHALL SUPPLY FIELD KITS CONTAINING ADDITIONAL COATING FOR FIELD REPAIRS AND SPECIFIC INSTRUCTIONS FOR SURFACE PREPARATION AND COATING APPLICATION. SURFACE PREPARATION AND COATING APPLICATION.

DONUT FENDER NOTES

1. WETA TO SUPPLY TWO (2) DONUT FENDER.S
2. CONTRACTOR RESPONSIBLE FOR PICKING UP TWO (2) DONUT FENDERS FROM WETA'S CENTRAL BAY OPERATIONS AND MAINTENANCE FACILITY LOCATED AT :
   670 WEST HORNET AVENUE
   ALAMEDA, CA 94501.
3. CONTRACTOR RESPONSIBLE FOR THE INSTALLATION OF THE TW O (2) DONUT FENDERS AT ALAMEDA HARBOR BAY FERRY TERMINAL.
4. FENDER SHALL BE OCEAN GUARD MONOPILE DONUT FOAM-FILLED FLOATING FENDER MANUFACTURED BY MARINE FENDERS INTERNATIONAL OR APPROVED EQUIVALENT.
5. THE FENDER SHALL BE FREE TO ROTATE AROUND THE SUPPORTING PILE AND MOVE UP AND DOWN ALONG THE PILE TO ACCOMMODATE THE TIDE
6. GEOMETRY

OUTSIDE DIAMETER:	6 ' NOM.
FLAT SIDE FREEBOARD HEIGHT:	10'-0" MIN.
OVERALL FLAT SIDE HEIGHT:	15'-0" NOM.
PILE SIZE:	36" Ø
FENDER COLOR:	BLACK

7. OTHER CRITERIA:

VESSEL SPEED:	1.2 FPS
TOTAL FENDER AND PILE ENERGY:	15.0 K-FT

MAXIMUM REACTION = 29.5 k/ft AT 60% COMPRESSION.
MINIMUM ENERGY ABSORPTION = 8.7 kip-ft/ft AT 60% COMPRESSION.

REGISTERED PROFESSIONAL ENGINEER
JAMES P. CONNOLLY
C 64532
CIVIL
STATE OF CALIFORNIA

REV	DATE	DESCRIPTION	BY	CHK
A	05/08/2020	REQUEST FOR PROPOSAL	JRVS	AESP

CLIENT

WATER EMERGENCY TRANSPORTATION AUTHORITY

CONSULTANT

COWI

1300 Clay Street, 7th Flr
Oakland, CA 94612
Tel.: 510.839.8972
Fax: 510.839.9715
Website: www.cowi-na.com

PROJECT TITLE

ALAMEDA HARBOR BAY FERRY TERMINAL DONUT FENDER PILES

REQUEST FOR PROPOSAL

DRAWING TITLE

DONUT FENDER PILES

SCALE	DESIGNED	APPROVED	
AS SHOWN	JRVS	JPC	
DRAWN	CHECKED	DATE	
NIF	AESP	03/01/2020	
PROJECT NO.	TASK NO.	SHEET NO.	REV.
A133168	001	S003	A

PLOTTED BY: NOEL FORTEZ PLOT DATE:8/6/2020 2:32:29 PM
FILE LOCATION: O:\A133000\A133168\CAD\REP DRAWINGS\A133168-S003.DWG