Bay Breeze and Solano Replacement Vessels

19-013

Addendum #2

22 May 2020

SAN FRANCISCO BAY AREA
WATER EMERGENCY
TRANSPORTATION AUTHORITY

SCOPE

This Addendum No. 2 consists of 3 pages and 4 documents. It includes the following:

1. Answers to requests for clarification as of 18 May 2020. The due date for requests for clarifications and requests for approved equals has been extended as part of the changes to revision A of Part A of this RFP.

2. Revision A of Part A of this RFP which includes an extension to the timeline for requests for clarifications and requests for approved equals and the proposal due date among other changes. Please read the entire document for changes.

3. Revision A of Part B of this RFP which includes several changes. Please read the entire document for changes.

4. Revision 2 or Appendix B2 – WETA Standard Details

ACKNOWLEDGMENT BY BIDDER

Each bidder is required to acknowledge receipt of all Addenda, including this Addendum No. 2 as specified in the RFP Instructions to Offerers.

ISSUED BY: Tim Hanners

Digitally signed by Tim Hanners
DN: cn=Tim Hanners, o=WETA, ou=Engineering & Maintenance, email=hanners@watertransit.org, c=US
Date: 2020.05.22 11:35:05 -07'00'

_____

Tim Hanners Date
Weta

WATER EMERGENCY TRANSPORTATION AUTHORITY

RFP: 19-013 Bay Breeze & Solano Replacement

Updates listed below for reference only. Proposer responsible to review all changes made in addendum #2.

No.	Document	Revision	Section	Page No.	Change
1	Part A	A	Proposal Timeline	1	Update dates for Written Requests for Clarification and Requests for Approved Equals. Clarified that requests for Approved Equals need to be submitted for consideration by this date. Update due date for proposals
2	Part A	A	Request for Clarification of RFP	3&4	Section updated to clarify the request for "Or Equal" process for proposals
3	Part A	A	Financial Capacity	8	Removed last paragraph that was in conflict with the bonding section
4	Part B	A	081 - Principal Characteristics	15	Updated Table 081-1 Length Overall
5	Part B	A	081 - Principal Characteristics	15	Updated Table 081-1 subscript notes to remove reference to "Design" column.
6	Part B	A	259 - Engine Exhaust	34	Added sentence on EPA Tier 4 certification implications with DPF addition
7	Part B	A	436 - General & Fire Alarm System	51	Clarified that the general alarm and public address systems are separate from the fire alarm system
8	Part B	A	514 - Heat, Ventilation, % Air	59	Deleted the word "Only" from Pilothouse Air Conditioning paragraph.
9	Part B	A	982.2 - Sea Trials	109	Delete the word "Operational" and replaced it with Final so that it matched these specifications
10	Part B	A	983 - Delivery	109	Delete the word "Operational" and replaced it with Final so that it matched these specifications
11	Appendix B	2	Appendix B2 - WETA Standard Details	4	Updated Standard bilge systems piping and foundation details
12	Appendix B	2	Appendix B2 - WETA Standard Details	12	Added general notes that were missing on Jason's Cradle drawing

WATER EMERGENCY TRANSPORTATION AUTHORITY

RFP: 19-013 Bay Breeze & Solano Replacement

No.	Requestor	Question	Proposed response	RFP document Reference	RFP document revised
1	MJP	The Bay Breeze and Solano Replacement Vessel RFP #19-013 specifically references HAMILTON Waterjet. Would WETA consider an equivalent waterjet, meeting or exceeding all specifications within the RFP, manufactured by a company other than Hamilton Jet?	Proposers must submit requests for approved equals pursuant to Part A and Section 830 of Part B of the RFP. Such requests must be submitted by the revised deadline of June 5, 2020--see new timeline revised by this Addendum. This new deadline applies both to requests for clarification and to requests for Approved Equals.	Addendum #2	Part A Timeline
2	MJP	Under RFP #19-013 would WETA allow for prospective contractors to submit multiple proposals with different waterjets?	No, Bidders may propose only one waterjet manufacturer. Bidders shall propose one vessel with the equipment meeting or exceeded the requirements of RFP. Proposers must submit requests for approved equals pursuant to Part A and Section 830 of Part B of the RFP. Such requests must be submitted by the revised deadline of June 5, 2020--see new timeline revised by this Addendum. This new deadline applies both to requests for clarification and to requests for Approved Equals. Proposers may submit multiple proposals with different approved components.	Addendum #2	Part A Timeline
3	Arcadia Alliance	During the meeting it was clarified that the vessels overall length should be 130'. Does this overall length include the waterjets? If waterjets cause vessel to go beyond 130' will there be a penalty?		Addendum #1	Part B Table 081-1
4	ESS	In Section 436 it calls out the General Alarm and Fire Alarm to be part of the same system and to interface with the PA system. On the Gemini, Hydrus, and Pyxis classes the General Alarm is part of the PA system, but there isn't any integration between the fire alarm system and PAGA system. On this new class of vessel is the General Alarm to be part of the Fire Alarm system as written in the specification? Or will the General Alarm be part of the PA system (Section 433) as is on the other class of vessels?	The 436 section will be revised to indicate the General Alarm System will be integrated with the PA system. The Fire Alarm System will remain stand alone.	Addendum #2	Part B Section 436
5	ESS	Secondly, if the General Alarm is to be part of the Fire Alarm system, we will need a trigger from the fire alarm system, to activate the ADA Video system. If the General Alarm is part of the PA system, we have that trigger covered, however do we need an alarm trigger from or too the Fire Alarm system in that instance? I am not aware of Subchapter K requiring integration between the two. It does say the General Alarm can be part of the Public Address system however.	The 436 section will be revised to indicate the General Alarm System will be integrated with the PA system. The Fire Alarm System will remain stand alone.	Addendum #2	Part B Section 436
6	All American Marine	Will firms be able the use past experience in constructing other catamaran K boats and other quad waterjet T boats as an surrogate to a "proven" design? If not, all other evaluation criteria being equal, how many points will a firm be penalized for the lack of a parent craft or proven design? (The answer to these questions will allow a firm to make an informed decision on whether or not they can overcome this deficit.)	If a parent craft is not available the proposer should submit a CFD analysis. The points scored by a proposal are based on its merits.		
7	All American Marine	Will CFD analysis be an acceptable alternative to a parent craft. If so, what CFD data points would be WETA prefer to have included in a CFD report to deem it meaningful and acceptable?	CFD analysis of a new vessel design is acceptable. The CFD analysis should include a model that has been validated and verified with real world comparisons of similar flow regimes. The CFD software should be well validated with a user base in similar analysis and a proven track record of performance.		
8	All American Marine	Section 111 Hull Structure - addresses best clearance for propulsion engines, Does WETA have any minimum engine or reduction gear access requirements, such as minimum space required around the front, sides or top of machinery?	No.		
9	Pacific Power Group	Would WETA issue a request to builder to make twin engine proposal? Most builders we have spoken with are under the impression that WETA only wants a quad engine vessel and therefore will not spend the effort and money to make a twin engine proposal without WETA expressing their clear desire to receive twin engine vessel proposals.	The intent of the RFP is to solicit proposals for a quad engine vessel.		
10	Pacific Power Group	If WETA will not issue a request for twin engine proposals, will they confirm that twin engine proposals will be considered and evaluated on the basis of the RFP and scored against quad engine vessels based on the scoring criteria?	The intent of the RFP is to solicit proposals for a quad engine vessel.		
11	Pacific Power Group	Will WETA consider Kamewa Water jets for an as equal water jet propulsor for the vessels.	Proposers must submit requests for approved equals pursuant to Part A and Section 830 of Part B of the RFP. Such requests must be submitted by the revised deadline of June 5, 2020--see new timeline revised by this Addendum. This new deadline applies both to requests for clarification and to requests for Approved Equals.		
12	NBBB	The passenger numbers stated in the objective column of the Principal Characteristics table 081-1 does not equate to the sum of interior and exterior seats. Could WETA clarify the requirement?	The seating in some configurations might equal less than the vessels passenger capacity and in others more. The RFP provides for the flexibility for the bidders to propose the best arrangement. Having a seat for every passenger is preferred.		
13	NBBB	Subscript 1 under the Principal Characteristics table 081-1 refers to a Design column. There are no columns with this heading in table 081-1. Could WETA clarify what is meant by the statement in subscript 1.	Subscript 1 is an error as that column has been removed from the table. This will be corrected.	Addendum #1	Part B Table 081-1
14	NBBB	Table 081-1 states that maximum Length of the molded hull is 130'. For the avoidance of doubt, could WETA confirm that L (molded hull) is intended to mean length overall and includes fendering, waterjets and other appendages?	See addendum 1 for updated table	Addendum #1	Part B Table 081-1
15	NBBB	Section 126 requires all tanks to be independent of the hull shell. For the size of the fuel oil tanks required, independent tanks are likely to result in a considerable weight and tonnage penalty for the vessel. This will in turn have a negative impact on the vessel's fuel consumption. Would WETA accept a fuel tank arrangement where the tank is integral to the inboard side shell only, with sufficient clearance from the bottom and outboard shells to provide access and protect from damage?	No		
16	NBBB	As part of the 200 points awarded for the vessel design part of the scoring system, could WETA clarify how individual criteria will be scored in relation to others, and which ones will be considered as most important? For example, will passenger numbers have a higher score weighting than vessel speed? In other words, how will scores differ between a vessel which meets the objective for passenger numbers but only the threshold value for speed, and a vessel which only meets the threshold passenger numbers and the objective speed? How is the scoring weighted?	The Evaluation Criteria are as stated in Part A of the RFP.		
17	NBBB	The liquidated damages clause only makes mention of late days beyond contractual delivery date. How are things like noise and speed requirements handled should the vessel turn out deficient on one of these metrics?	WETA will not accept a vessel that does not meet the contract requirements.		
18	NBBB	Does WETA have a preference for a soft mounted house vs singular structure construction as long as noise and vibration goals are achieved?	No		
19	NBBB	There are numerous high value items called out in the specification that are not manufactured in the United States. Initial estimates indicate that it may be mathematically challenging to meet the Buy America standard by including the "OWNER'S REQUIREMENTS" selections. Will WETA consider an equivalent offering strictly on the basis of meeting the 70% content threshold? Will WETA consider submitting waivers for equipment that is clearly not available in the US?	WETA does not plan on seeking any Buy America Waivers. Proposers may submit requests for approved equals pursuant to Part A and Section 830 of Part B of the RFP. Such requests must be submitted by the revised deadline of June 5, 2020--see new timeline revised by this Addendum. This new deadline applies both to requests for clarification and to requests for Approved Equals.		
20	NBBB	The specification mentions the vessel shall be designed and built to class rules, but not classed. Please confirm that this means that the structure shall be designed and built to class rules, but the systems shall be designed to 46CFR Subchapter K regulations. How will WETA decide on conflicting rules from USCG and a chosen class society?	Structure shall be designed and built to Class rules. All other items of design shall be to USCG subchapter K regulations unless there is written approval from WETA and USCG. As an example the individual electric bilge pumps require approval from the USCG for consideration under HSC rules. This item is acceptable to WETA as it is their standard bilge system.		
21	NBBB	Is it acceptable to use non-metallic potable and sewage and DEF tanks?	Yes, as long the plastic tanks do not exceed the fire load requirements for the spaces they are installed in.		
22	NBBB	Will WETA accept a DBE report in a spreadsheet format?	Yes, that is acceptable		

23	NBBB	The Specifications call for a heavy-duty marine diesel engine but the specified MAN D2862 LE489 engine is a medium duty engine with a limit of 3000 hours per year and an average load factor of less than 50%. In comparison, a heavy-duty engine from MAN would be rated for unlimited yearly hours and up to 100% average load factor. Would WETA clarify whether it will accept alternative engines with a similar rating to that of the specified MAN engine rather than a heavy-duty rating?	The rating stated in the specifications has been approved by MAN for WETA's route profiles based on the 85% MCR loading of the engines. Proposers may submit requests for approved equals pursuant to Part A and Section 830 of Part B of the RFP. Such requests must be submitted by the revised deadline of June 5, 2020--see new timeline revised by this Addendum. This new deadline applies both to requests for clarification and to requests for Approved Equals.		
24	NBBB	The gearbox sizing philosophy called for in the specifications is not in line with the rating of the specified MAN engine and will lead to a gearbox that is considerably oversized for the engine's operational profile of less than 3000 hours per year at an average engine load factor of less than 50%. Would WETA accept a medium duty gearbox with a maximum power rating suitable for the maximum rated power and rpm of the engine?	No		
25	NBBB	Does WETA have a model of DPF in mind or proposed space reservation? The initial arrangement may be greatly impacted by a yet unrealized DPF system.	The RFP does not specify a particular brand of DPF. Please provide in your proposal what you were able to provide within the limitations of the EPA Tier 4 certification.	Addendum #2	Part B 259 section
26	NBBB	Will WETA accept voltages greater than 208V provided manufacturers confirm that motors will run at 208V with no adverse effects?	All of WETA's vessels are 208VAC. No, a higher voltage is not acceptable for fleet commonality.		
27	NBBB	Please clarify what is meant by clamp on sensors with regards to the sight gauges. Will WETA accept factory installed 4-20mA sensors attached to GEMS SureSite Gauges?	Yes, 4-20mA pressure sensors are acceptable provided they are compliant with the requirements of the 438 section. The comment is in reference to their Discrete switch modules as the have proven to not be reliable.		
28	NBBB	Please clarify the dimension stated as "see note 1" on Page 12 of Appendix B2 (the Jason's cradle launch system).	The drawing will be corrected. The notes read as following: Note 1: Typical Opening in deck is one frame bay (minimum 1000mm). Note 2: Jason's Cradle minimum width is 880mm, 5 rung model.	Addendum #2	Appendix B2
29	Delta	(1) On Page 2 of the RFP under Performance Bond, the RFP states: "If OWNER exercises the option for the Option Vessel, within ten (10) calendar days of the Notice to Proceed for the Option Vessel, Contractor must furnish a Performance Bond in an amount specified by OWNER." The wording "in an amount specified by OWNER" is vague and could be anything from 0% of the Vessel's price to 100% of the Vessel's price. Can you clarify the bonding amount required if an option is exercised? We assume that this should be 25% but would like to get your confirmation of the percentage required.	The intent of the quoted section is to set the maximum expected amount of a performance bond. The exact amount may depend on the highest ranked proposer's performance schedule. As per Part A of the RFP, Proposers will be deemed to have accepted all terms and conditions in the sample agreement unless any exceptions taken are identified and explained in their proposal.		
30	Delta	(2) With regard to the Sample Agreement Section 8 - Liquidated Damages and Section 22 – Termination, it would be beneficial for offerors to have clarification regarding delays arising from the current Public Health crisis. The situation with regard to COVID-19 is both unpredictable and out of any contractor's control. Can you please confirm that delays related to COVID-19, for purposes of this contract, to be beyond the reasonable control of the Contractor, and that delays in meeting the contract schedule attributable to COVID-19 will not be an event of default?	As per Part A of the RFP, Proposers will be deemed to have accepted all terms and conditions in the sample agreement unless any exceptions taken are identified and explained in their proposal.		
31	Delta	We also would like to request an extension in the period of time allowed to request clarifications from May 18, 2020 to June 1, 2020. This is in consideration of ongoing delays due to COVID-19 in obtaining information from potential subcontractors, suppliers and regulatory agencies,. This will allow us to ensure that any questions from such vendors are adequately addressed.	The deadline for requests for approved equals or clarifications is extended until June 5, 2020. See Part A of this Addendum.		
32	Delta	Additionally, while we are starting to see some suppliers begin returning to more normal work arrangements, we are still experiencing COVID-19 related delays in getting quotes and responses from many vendors. As a result of these delays coupled with the need to get your responses on the clarifications requested above, we also request a six-week extension of the proposal due date from June 29, 2020 to August 10, 2020.	The Proposal due date is extended until July 13, 2020. See Part A of this Addendum.		
33	Mavrik	1. Would WETA allow us to propose an alternate twin jet option (Dorado Class) with the current requirement minus propulsion package alongside a proposal for the quad engine vessel? We think this is a viable request considering the investment in the current class and the valuable support of PPG/MTU from a fleet commonality standpoint.	No		
34	Mavrik	2. Performance Bond – in the first section, of the RFP page 2, second to last paragraph, "an irrevocable standby letter of credit issued in a form approved by the OWNER may also be an acceptable substitute to a Performance Bond" is noted. On page 8, last paragraph, "In the alternative, Proposer may provide a written assurance from an authorized representative of the Proposer that it will provide, at the time of contract execution, an Irrevocable Standby Letter of Credit (LOC) equal to 100% of the Total Price included in the Price Proposal" The question: Is 100% required for this option or can the ILOC amount be equal to the same terms as the bond requirement? "Contractor must furnish a Performance Bond in an amount equal to 25% of the total price for Base Vessel 1 and Base Vessel 2"	The ILOC would be equal to the Bond requirements, not 100%. Part A will be updated to reflect this.	Addendum #2	Part A, page 8, Financial Capacity
35	Mavrik	1. In the tech spec, section 514, table 514-1 implies the entire passenger cabin shall be temperature controlled both heat and cool. On page 59, pilot house air conditioning it says "Air conditioning shall be provided in the Pilothouse space only" We just want to confirm air-conditioning and heating is required for all passenger spaces per the table, not just the pilot house.	HVAC is required for all passenger spaces and the pilot house. Section 514 will be updated to reflect this.	Addendum #2	Part B, Section 514, Pilothouse Air Conditioning
36	Arcadia Alliance	Can the WETA Forms and other documents and/or schedules be provided in native file form to reduce the need to recreate the forms?	No		
37	Arcadia Alliance	What is WETA's target date for contract execution?	Please see the proposed timeline in Part A of this RFP		
38	Arcadia Alliance	What is WETA's target date for delivery of Vessel #1?	See Part A of the RFP. Proposers must provide a proposed schedule for building each vessel, including a proposed timeline for the completion of key events like delivery of the vessels.		
39	Arcadia Alliance	What is WETA's target date for delivery of Vessel #2?	See Part A of the RFP. Proposers must provide a proposed schedule for building each vessel, including a proposed timeline for the completion of key events like delivery of the vessels.		
40	Arcadia Alliance	What is WETA's target date for delivery of Optional Vessel, assuming it is optioned by the end of 2021?	See Part A of the RFP. Proposers must provide a proposed schedule for building each vessel, including a proposed timeline for the completion of key events like delivery of the vessels.		
41	Arcadia Alliance	Part D Forms - Can line items be combined at all?	No		
42	Arcadia Alliance	Part D forms - What would be the scoring penalty if they were?	If the required forms are not filled out the proposal could be considered non-responsive and rejected		
43	Arcadia Alliance	When evaluating proposals, will further efforts to reduce the amount of emission be considered in the scoring?	WETA encourages proposals for efficient vessels. The Evaluation Criteria are as stated in Part A of the RFP.		
44	Arcadia Alliance	Will a separate crew quarters or accommodations be required to house the lockers and seating/tables?	No, crew lockers shall be incorporated into an existing feature such as the snack bar storage room or entrance to the pilothouse. The lockers need to be located outside of the areas the passengers can access. Final details shall be subject to review and approval in the detailed design and engineering phase.		

Bay Breeze and Solano Replacement Vessels

19-013

Request for Proposals
and Proposal Notices

Request for Proposal

19 May 2020

Revision A

SAN FRANCISCO BAY AREA
WATER EMERGENCY
TRANSPORTATION AUTHORITY

Table of Contents

The San Francisco Bay Area Water Emergency Transportation Authority (WETA, "OWNER") is seeking proposals from qualified firms in response to this Request for Proposals ("RFP") for two Passenger Vessels that will replace the M/V Bay Breeze and the M/V Solano, RFP #19-013, as well as an option for a third vessel, for WETA's exercise in its sole discretion any time prior to December 31, 2021.

BACKGROUND

The San Francisco Bay Area Water Emergency Transportation Authority, a local agency with multi-county jurisdiction, was established by the California State Legislature to expand regional ferry service and coordinate waterborne emergency response activities on San Francisco Bay. The OWNER's comprehensive plan to establish ferry service on seven new routes was approved by the Legislature in 2003 (the "Plan"). The OWNER has also assumed operation of existing ferry services in the Bay Area (with the exception of those that are operated by the Golden Gate Bridge Highway and Transportation District), as directed by the Legislature through SB 976 and SB 1093. The Plan was prepared with input from existing private operators, public transit providers, governmental agencies, environmental groups, business organizations and local representatives. The OWNER's goal is to design, build and operate a seamless transit system that responds to the region's congestion management needs, serves in an emergency response capacity, develops innovative environmental solutions for ferry vessels, contributes to economic viability, and improves quality of life.

PROPOSAL TIMELINE

Listed below is the anticipated schedule that outlines pertinent dates of which Proposers should be aware—all dates are subject to revision at the OWNER's discretion:

TIMELINE	
4/20/2020	RFP Release
5/4/2020	Pre-Proposal Conference @ 1:00 PM
6/5/2020	**Written Requests for Clarifications and Requests for Approved Equals are due**
7/13/2020	**Proposals Due @ 2:00 PM PST**
Q4 2020	Board Approval

PURPOSE

The purpose of this Project is to contract with a qualified builder ("Proposer") to design and construct two (2) passenger only ferry vessels that will service multiple existing and future routes on San Francisco Bay, and, if requested by WETA, an optional third passenger only ferry vessel ("Option Vessel"). The vessels are not intended as the primary vessels on any specific route, rather as alternate vessels that are able to be employed as needed to service any of the designated routes. Certain routes have unique physical limitations and performance requirements that must be met to service the route. These key requirements are described in the

Technical Specification. The critical requirements of the design carry weighted scoring as described in the Proposal Evaluation Process section of this document.

All work must be performed in conformance with the Technical Specifications attached as Part B of this RFP.

SAMPLE AGREEMENT

WETA's sample agreement for this project is included as Part C of this RFP. The sample contract contains many terms and conditions affecting the successful performance of the contract work. Proposers are responsible for taking the contracting requirements into account when preparing their proposals. Proposers will be deemed to have accepted all terms and conditions in the sample agreement unless any exceptions taken are identified and explained in their proposal.

PERFORMANCE BOND

The Contractor must furnish at its own expense a Performance Bond at the times and in the amounts as follows:

- Within ten (10) calendar days of execution of the contract, Contractor must furnish a Performance Bond in an amount equal to 25% of the total price for Base Vessel 1 and Base Vessel 2.
- Upon OWNER's Final Acceptance of Base Vessel 1, the Performance Bond may be reduced to an amount equal to the sum of 25% of the total price for Base Vessel 2, plus 10% of the total price for Base Vessel 1.
- Upon the expiration of the warranty period and settlement of all outstanding warranty claims for Base Vessel 1, the Performance Bond may be reduced to an amount equal to 25% of the total price for Base Vessel 2.
- Upon OWNER's Final Acceptance of Base Vessel 2, the Performance Bond may be reduced to an amount equal to 10% of the total price for Base Vessel 2 and remain in full force and effect until the expiration of all warranties and settlement of all outstanding warranty claims.
- If OWNER exercises the option for the Option Vessel, within ten (10) calendar days of the Notice to Proceed for the Option Vessel, Contractor must furnish a Performance Bond in an amount specified by OWNER.

The bond must be with a California-admitted corporate surety or with two (2) or more sufficient sureties to be approved by the OWNER. As an alternative to furnishing a bond, the Contractor may guarantee faithful performance of the contract by depositing with the OWNER a certified check or cashier's check from a solvent bank for the prescribed amount. An irrevocable standby letter of credit issued in a form approved by the OWNER may also be an acceptable substitute to a Performance Bond. The Performance Bond will guarantee the Contractor’s faithful performance of the contract and compliance with all terms, conditions and requirements specified in the contract and must remain in full force and effect until the expiration of all warranties and settlement of all outstanding warranty claims. The Bond must be submitted using the form included in Part D.

For purposes of Proposer's Price Proposal, set forth in Part D, Proposers must include bonding costs to satisfy the requirements set forth above.

RFP CONTENT; EXAMINATION OF DOCUMENTS

This RFP sets forth the requirements for the preparation, submission and contents of proposals submitted to the OWNER. Further, this RFP describes the process and factors under which each proposal will be evaluated, and the selected Proposer identified.

This RFP is organized into the following four parts:

- Request for Proposals: Part A
- Technical Specification: Part B
- Sample Agreement: Part C
- Proposal and Contract Forms: Part D

Proposers are solely responsible for examining, with appropriate care and diligence, all these documents and fully informing themselves of all relevant aspects of the services. By submitting a response to this RFP, Proposers represent that they have examined this RFP and are familiar with the scope of services.

PRE-PROPOSAL CONFERENCE

The OWNER will conduct a pre-proposal conference as outlined in the proposal timeline table above. Attendance is not mandatory, but is strongly encouraged. The pre-proposal conference is scheduled to take place online through a video conference application. Proposers are required to submit contact information to Tim Hanners, Hanners@watertransit.org & Christian Stark, Christian@auroramarinedesign.net for attendees so that email invitations can be sent.

The purpose of the pre-proposal conference will be to answer questions about the RFP. All statements and interpretations provided by the OWNER at the pre-proposal conference are non-binding on the OWNER unless contained in a subsequent written addendum.

REQUEST FOR CLARIFICATION OF RFP

A request for clarification regarding the meaning or interpretation of this RFP, or the scope of services, **or a request for approved equal,** may be requested in written form by contacting Tim Hanners, Project Manager, at Hanners@watertransit.org. All requests must be submitted by the dates and times set forth in the proposal timeline table above. **With regard to approved equals, the following applies:**

Unless otherwise specifically provided in the specifications, reference to any equipment, material, article or patented process by trade name, make, or catalog number will be regarded as establishing a standard of quality and will not be construed as limiting competition. Proposers should notify the Owner through the process set forth in this section, of any inappropriate brand names, or types of components and/or equipment that may be called for in this RFP and to propose a suitable substitute for consideration. A Proposer may, at its option, propose to use any equipment, material, article or process which it demonstrates to the Owner's satisfaction is equal to that designated. The evaluation of proposals may take into account the use of equipment or materials that are not in conformance with the technical specifications, and/or that are not equals that the Owner has approved through the process set forth in this paragraph. Proposals with

irregularities such as these will be addressed in the Proposal Evaluation Process to ensure they are in conformance with the intent of the technical specifications and/or are considered equal to that designated. Proposals with irregularities that are not minor in nature may be deemed non-responsive as per the process outlined in the Proposal Evaluation Process.

Specifying a brand name or specific types of components and/or equipment in this RFP does not relieve the selected proposer from its responsibility to furnish the work in accordance with the warranty and contractual requirements.

The OWNER specifically requests that any questions concerning this RFP be directed only to Tim Hanners, Project Manager.

Should the Owner determine that clarification of a possibly ambiguous or incomplete statement contained in the RFP is in order, **or should the Owner determine to grant a request for an approved equal,** the Owner will issue a written addendum clarifying the matter, which will be posted on the Owner's website (weta.sanfranciscobayferry.com). Each Proposer has an ongoing responsibility to check the Owner's website for addenda. The OWNER has no obligation to provide any other notice of addenda being issued. Addenda issued for this RFP, if any, must be expressly acknowledged in Proposer's cover letter.

PROPOSAL DUE DATE: SUBMISSION OF PROPOSALS

Proposals will be submitted and evaluated as set forth in this RFP.

All proposals should be submitted to:

Tim Hanners, Project Manager
San Francisco Bay Area Water Emergency Transportation Authority
1050 Nimitz Ave, Vallejo CA. 94592

One (1) hard copy and one (1) digital copy on USB drive of Proposals must be received at the above address no later than outlined in the timeline table above. Proposals received after the date and time specified above will be considered late and will not be accepted.

All proposals in response to this RFP should be submitted in a sealed envelope labeled **Bay Breeze and Solano Replacement Vessel, RFP #19-013,** and include the name of the Proposer. Price Proposal information must be submitted in a separate sealed envelope labeled PRICE PROPOSAL – **Bay Breeze and Solano Replacement Vessels, RFP #19-013**, and include the name of the Proposer.

PROPOSAL CONTENTS AND FORMAT

Proposals submitted in response to this RFP must respond fully to the requirements of this RFP and include the following elements in the sequence listed below. It is expected that proposals submitted to the OWNER be of professional caliber in context and appearance; however, expensive binders are neither required nor desired. All

descriptions and materials should be clear, concise, and provide enough information to minimize questions and assumptions.

Cover Letter

The signed cover letter must be on company letterhead clearly stating the firm name of the Proposer, business address, telephone and facsimile numbers, and e-mail address. The cover letter should include the following information:

- Introduction of the firm and summary of its qualifications.
- Name(s) of authorized principals with authority to negotiate and contractually bind the firm.
- A statement that binds the Proposer to its proposal for 180 calendar days.
- Acceptance of or exceptions to the Agreement included as Part C. This confirmation must include an explicit acknowledgement that Proposer will meet all insurance requirements in the Agreement.
- An express acknowledgement of the receipt of a complete set of RFP documents and all Addenda issued for this RFP, if any.
- Indication of whether there are any conflicts of interest that would limit the Proposer's ability to provide the requested services. Disclose any such conflicts on a separate document included with the proposal.
- Indicate whether there are any required disclosures pursuant to the Levine Act. Include any such disclosure in a separate document with the proposal.
- Confirm that there are no portions of the proposal that contain confidential information or indicate that the proposal includes a confidentiality index. If Proposer is marking information as confidential and submitting a confidentiality index, the cover letter must include a statement that the Proposer: i) assumes all responsibility for any challenges resulting from non-disclosure, (ii) waives all claims against WETA and its directors, officers, employees or agents in connection with withholding the material in the confidentiality index or the disclosure of any portion of the proposal not included in the confidentiality index; and iii) agrees to indemnify and defend WETA against all claims and damages arising from WETA's non-disclosure of material included in the confidentiality index.

Technical Proposal

Proposers must provide a Technical Proposal that consists of an Executive summary and the following four elements:

- Technical Approach, Qualifications and Experience
- Vessel Design
- Schedule for the completion of all vessels including the option vessel
- Vessel Metrics

EXECUTIVE SUMMARY

Provide a brief summary of the Proposer's qualifications and proposed technical approach. The summary should include any feature(s) that may differentiate this team from others. Describe the Proposer's understanding of the Project and the objectives for the vessels.

Identify each equity member of Proposer's team and each other member of Proposer's team, (a) with primary responsibility for design; (b) with primary responsibility for construction; or (c) a Subcontractor with a proposed subcontract value greater than 15% of the anticipated contract value (collectively “Major Participants”). Provide a summary of the proposed management, decision making, and day-to-day operation structure of Proposer.

The Executive Summary should be written in a non-technical style and should contain sufficient information for reviewers with both technical and non-technical backgrounds to become familiar with Proposer's ability to satisfy the requirements of the Project.

TECHNICAL APPROACH, QUALIFICATIONS AND EXPERIENCE

TECHNICAL APPROACH

Provide an organization chart showing the reporting structure of the Project team noting the location of key personnel and Subcontractors with a proposed subcontract value greater than 15% of the anticipated contract value that would have a lead role in the Project (Major Participant). At a minimum, key personnel should include the Project Manager and/or senior Project Representatives for the Proposer and Major Participants but may include any other team members that the Proposer wishes to identify. Provide a responsibility matrix covering the responsibilities and scope of work for key positions.

The technical approach should include the following:

- Design and engineering approach including the selection of Major Participants and the division of engineering tasks between internal and external resources.
- Approach to adapting or modifying a parent craft design or the procedures that will be used to mitigate the risks associated with the development of a new design. Describe any specialized software or analysis tools that will be used to mitigate performance risk.
- Proposed construction approach and build strategy including, if applicable, the modular construction plan, utilization of CNC capabilities and any outsourcing of subassemblies or components.
- Vessel construction plan including workflow.
- Identification of any other current or anticipated projects that could interfere with your construction plan.
- Vessel outfitting plan.
- Vessel launch plan identifying any special equipment requirements, environmental or seasonal constraints.
- Test and trials plan execution.
- Proposed method for delivery of the vessel(s).

- The roles and responsibilities of the Proposer and Major Participants and how the Proposer, Major Participants, Subcontractors, Vendors and Suppliers will be coordinated and managed during the Project.
- How the Project will be staffed, and plan for dealing with unanticipated staffing shortfalls.
- How that staff will be managed.
- How Subcontractors will be managed. The plan should include contingencies for difficulties with Subcontractors.
- Systems used to organize and allocate resources.
- Systems used to schedule design, construction, and testing activities.
- How work is monitored, and how adjustments in production are made.
- Quality control, quality assurance, and internal testing programs.
- How the USCG inspection and testing program will be structured and managed.
- How the Proposer intends to interface with the OWNER during design, construction and post-construction.
- How the review process will be structured and managed with the OWNER.

QUALIFICATIONS

Provide resumes showing the professional qualifications, capabilities, experience, education, and current responsibilities of the Project Manager and key staff (including, at a minimum, the Project Superintendent, scheduler, and Project safety officer). Include any experience on similar projects. Resumes should indicate current assignment, work location, and availability.

Where relevant, note when individuals mentioned above have worked with each other and briefly describe the circumstances (project, relationship, etc.). When individuals have worked together on multiple projects, only one example is required. Describe the qualifications and experience of the scheduling personnel.

EXPERIENCE

Identify and describe the aluminum vessel construction experience of the Proposer and each Major Participant. List experience of Proposer and Major Participants on not less than three (3) and up to seven (7) relevant projects over the last 12 years. The projects should demonstrate the Proposer's capability and expertise with similar vessel construction. For each project, provide:

- Designer.
- Specifications.
- General characteristics.
- Route.
- Capacity.
- Configuration.
- Interior amenities.
- Propulsion (make, model and configuration).

- Auxiliary units.
- General Arrangement (drawings).
- Construction Schedule.
- As-built performance.
- Service speed (and engine load at that speed).
- Max speed (and engine load at that speed).
- Fuel consumption at service speed.
- Price as delivered.

SHIPYARD/FACILITIES

Describe Proposer's facilities that will be used. Include detail of production capacity including what other projects are presently underway or anticipated. Descriptions of the facilities should include yard capacity, infrastructure, and current and future workload.

- Describe the facilities that will be utilized including fabrication and assembly locations.
- Describe areas used for materials handling and storage.
- Describe crane capacity and capability.
- Describe how the vessels will be docked and launched.
- Describe where the vessels will be moored and accessibility after launch.

ENGINEERING

Describe the Proposer's approach to engineering the vessel.

- Describe the Proposer's in-house engineering capabilities, staff size and experience.
- Describe the workshare and responsibility split between outside naval architecture or engineering resources and the in-house staff.
- Describe the process for developing the as-built drawings.
- Provide sample production-level drawings from a previous vessel:
    - Structural assembly drawing showing part labeling, weld callouts, and parts lists.
    - Example of a parts nest file showing labeled parts and material standards.
    - A foundation drawing showing fabrication details and installation.
    - An HVAC installation drawing showing major equipment and duct routing.
    - Any significant piping system showing pipe system diagram, installation drawing with BOM, and spools.
    - Propulsion System drawing showing shafting between the gear output flange and the propulsor (either waterjet or propeller).

REFERENCES

List experience of Proposer on not less than three similar projects over the last seven (7) years. The projects should demonstrate the Proposer's capability and expertise with similar vessel construction. Provide contact information for all the listed similar projects.

FINANCIAL CAPACITY

Provide pertinent information to allow the OWNER to reasonably formulate a determination about the financial stability and strength of the Proposer such as financial (banking) references, financial statements, or other relevant documentation. Describe any administrative proceedings, claims lawsuits, settlements, or other exposures pending against the Proposer or to which the Proposer has been a party in the last five years where the amount in dispute exceeded $100,000.

Provide a letter from a California admitted surety, verifying that the Proposer will be able to obtain a Performance Bond in the amounts set forth in "Performance Bond" section of this RFP. Letters indicating "unlimited bonding capability" are not acceptable. The surety providing such letter must be rated in one of the top two categories by two nationally recognized rating agencies or rated at least A minus (A-) or better or Class VIII or better by "AM Best & Company," and must indicate the relevant rating in the letter. The letter must specifically state that the surety has read the RFP and evaluated the Proposer's backlog and work-in-progress in determining its bonding capacity. If a Proposer is a joint venture, partnership, Limited Liability Company or other association, separate letters for one or more of the individual equity participants of the Proposer are acceptable, as is a single letter covering all equity participants.

~~**In the alternative, Proposer may provide a written assurance from an authorized representative of the Proposer that it will provide, at the time of contract execution, an Irrevocable Standby Letter of Credit (LOC) equal to 100% of the Total Price included in the Price Proposal.**~~

VESSEL DESIGN

Describe Proposer's concept vessel design including general specifications and technical information for the Project. Include general arrangement drawings with cabin and machinery layouts. Describe the major vessel features and equipment including installed horsepower required.

Vessel Design should consist of the following major elements:

DETAILED VESSEL TECHNICAL INFORMATION

Provide the following detailed technical information that fully describes the proposed vessel design:

OPERATIONAL CHARACTERISTICS

- Speed vs. power curves.
- Predicted fuel consumption curve.
- The chosen hull form, explaining maneuverability and windage.
- Wake wash prediction, showing wake wash throughout the vessels speed range and a short description of where this data was derived.

- Exhaust emissions prediction demonstrating compliance with the Technical Specification.
- Weight and stability data in the form of a Preliminary Trim & Stability Booklet.
- A preliminary analysis of the turnaround time for loading and unloading of passengers and bicycles.
- Fuel consumption at specified power level.

VESSEL DRAWINGS

- General arrangement drawing:
    - Deck layout.
    - Cabin layout.
    - Seating plan (include make and model number of all seats and tables).
    - Boarding facilities.
    - ADA facilities showing aisle widths, wheelchair tie down locations, wheelchair accessible heads.
    - Bicycle stowage
- Inboard profile.
- Midship section (including scantlings)
- Machinery arrangement including propulsion shaftline and soft patches.
- Bridge layout with lines of sight.
- Removal plan of major machinery including generator.

EQUIPMENT LIST

Provide a complete list of all major proposed equipment including make and model number. The list shall include the following at a minimum:

- Propulsion machinery.
- Electrical (Major Components)
- Steering.
- Auxiliary systems.
- HVAC.
- Navigation, communication and electronics.
- Alarm, monitoring, and control devices.
- Entertainment.
- Commissary equipment.
- Interior outfitting, seating, floor and wall coverings etc.

SCHEDULE

Provide a preliminary schedule for building each vessel, identifying each major element of work involved in the design and construction, and proposed timeline for the completion of key events. Provide a date of completion by which Proposer will commit to completing all work. The preliminary schedule should at a minimum identify the following key events for each vessel commencing with the issuance of Notice to Proceed.

- Design submittals to USCG.

- Design approvals from USCG.
- Aluminum ordered.
- Main engines ordered.
- Generators ordered.
- Keel laid.
- Hulls complete.
- Main engines landed.
- Superstructure landed on hull.
- Launch.
- Ships power functional.
- Main propulsion functional.
- Builders trials.
- Acceptance trials.
- USCG weight survey.
- USCG Certificate of Inspection.
- Delivery of vessel.

VESSEL METRICS

Offeror shall submit form *WETA-10 Vessel Metrics* containing the requested operational characteristics and dimensions as part of this RFP.

Schedule of Values

Proposers are directed to submit firm prices for all work set forth in the Contract Documents on Forms WETA- entitled "Schedule of Values" for each vessel. The Schedule of Values for each vessel will also provide detailed information on how the "Total Direct Cost" of each line item is derived. The total of each Schedule of Values shall be entered into corresponding line item for each vessel in the Price Proposal form. The prices included within the Schedule of Values Form should include all costs for labor, materials, tools, equipment, services, Subcontractors, Suppliers, taxes (except California State sales or use taxes), insurance, shipment, delivery, overhead, profit, and all other costs necessary to perform the work in accordance with the Contract Documents.

To the extent there are Design & Engineering costs that will only be incurred once for all three vessels, such non-recurring costs should be included in the Engineering Schedule of Values for Vessel 1.

The Schedule of Values for the Option Vessel should assume WETA exercises the option in calendar year 2021.

Price Proposal

Unit prices and lump sum prices must be entered in the appropriate spaces provided. Unit Prices shall be multiplied by the quantities shown, and the total shall be inserted in the TOTAL PRICE AMOUNT column. All spaces MUST be filled out and all information provided in detail and breakdown as shown on these forms. In the

event of any error or discrepancy between the unit price and the calculated total price, the unit price shall govern. The Owner may correct any mathematical errors apparent on the face of the proposal.

The amounts shown in the Total Price Amount column must be added together in arriving at the Total Price.

The prices included within the Price Proposal Form should include all costs for labor, materials, tools, equipment, services, Subcontractors, Suppliers, taxes (except California State sales or use taxes), insurance, shipment, delivery, overhead, profit, and all other costs necessary to perform the Work in accordance with the Contract Documents. Please refer to the instructions below when completing the Price Proposal Form.

ROW 1, TOTAL SCHEDULE OF VALUES, VESSEL 1

Provide a total cost for all base contract scope of work as calculated from the Schedule of Values form for Base Vessel 1. The Schedules of Values line items are derived from the Contract Ship Work Breakdown Schedule (SWBS).

ROW 2, TOTAL OF OPTIONAL WORK ITEMS, VESSEL 1

Provide the total cost for all Optional Work Items as calculated from the "Optional Work Items" form. The Optional Work Items are derived from the Contract Ship Work Breakdown Schedule (SWBS). Every line item relates to a SWBS section, or group of SWBS sections as identified in the SWBS section referenced in the Optional Work Items.

ROW 3, TOTAL SCHEDULE OF VALUES, VESSEL 2

Provide a total cost for all base contract scope of work as calculated from the Schedule of Values form for Base Vessel 2. The Schedules of Values line items are derived from the Contract Ship Work Breakdown Schedule (SWBS).

ROW 4, TOTAL OF OPTIONAL WORK ITEMS, VESSEL 2

Provide the total cost for all Optional Work Items as calculated from the "Optional Work Items" form. The Optional Work Items are derived from the Contract Ship Work Breakdown Schedule (SWBS). Every line item relates to a SWBS section, or group of SWBS sections as identified in the SWBS section referenced in the Optional Work Items.

ROW 5, TOTAL SCHEDULE OF VALUES, OPTION VESSEL

Provide a total cost for all base contract scope of work as calculated from the Schedule of Values form for the Option Vessel. This amount should reflect the cost for one additional complete vessel, identical in all respects to Base Vessel 2, but with pricing for 2021.

Proposers to note that Optional vessel is not currently funded. In pricing this option, please assume that WETA will exercise the option prior to December 31, 2021.

ROW 6, TOTAL OF OPTIONAL WORK ITEMS, OPTION VESSEL

Provide the total cost for all Optional Work Items as calculated from the "Optional Work Items" form. The Optional Work Items are derived from the Contract Ship Work Breakdown Schedule (SWBS). Every line item relates to a SWBS section, or group of SWBS sections as identified in the SWBS section referenced in the Optional Work Items.

ROW 7, TOTAL OF SPARE EQUIPTMENT ITEMS

Provide the total cost for all Spare Equipment Items as calculated from the "Spare Equipment Items" form. The Spare Equipment Items are derived from the Contract Ship Work Breakdown Schedule (SWBS). Every line item relates to a SWBS section, or group of SWBS sections as identified in the SWBS section referenced in the Spare Equipment Items.

ROW 8, TOTAL PRICE, INCLUDING ALL APPLICABLE TAXES AND FEES

The total cost equals the sum of lines 1-7 This is the total cost of the project including all options, taxes and fees (except California State sales or use taxes). This total cost will form the basis for RFP scoring.

SHIPYARD RATE SCHEDULE

Proposers must commit to pricing the Shipyard Rate Schedule for work items that may apply in the event WETA issues changes orders during the project. The Proposer shall fill in the unit prices in column 4 for the Shipyard Rate Schedule that will apply for the duration of this project.

SCORING FORMULA

WETA will evaluate Price Proposals based on the Total Price using the following formula

$S = 400 \times L/P$

Where:

S is the score

P is the proposed Total Price being ranked

L is the lowest Total Price proposed

Although the Total Price on the Price Proposal Form will be used for purposes of evaluating proposals, WETA reserves the right to award a Contract that does not include all items in the Price Proposal, including option items, depending upon budgetary constraints.

Completed Forms

Complete and submit only the following forms provided in Part D:

- Form WETA-1 Schedule of Values
- Form WETA-2 Price Proposal

- Form WETA-3 Performance Bond
- Form WETA-4 Acknowledgement of Insurance Requirements
- From WETA-5 Buy America Certificate
- Form WETA-6 Lobbying Certification
- Form WETA-7 DBE Report
- Form WETA-8 DBE Selection Process
- Form WETA-9 SBE Affidavit of Size
- Form WETA-10 Vessel Metrics

WITHDRAWAL OF PROPOSAL

Submission of a proposal shall constitute a firm offer to the OWNER for 180 calendar days from the submission deadline for proposals.

A Proposer may withdraw their proposal any time before the date and time when proposals are due, without prejudice, by submitting a written request for withdrawal to the OWNER. A telephone or email request is not acceptable.

PROPOSAL EVALUATION PROCESS

Owner Evaluation Committee

The OWNER will establish an evaluation committee appointed by the Executive Director with responsibility for reviewing all proposals and conducting the evaluation process described in this RFP. The OWNER reserves the right to reject or accept each proposal, to waive any minor irregularities in proposals or procedures, and to request additional information from Proposers at any stage of the evaluation process.

Evaluation Criteria

The OWNER will evaluate proposals based on a maximum of 1000 points, weighted as indicated below:

Scoring Summary	
Technical Approach, Qualifications and Experience	150
Vessel Design	200
Delivery Schedule	50
Vessel Metrics	200
Total Price	400
Total	**1000**

Evaluation Process

ADMINISTRATIVE REVIEW

Each Proposal will be reviewed for the responsiveness of the Proposer to the requirements set forth in this RFP. The OWNER reserves the right to reject proposals that do not conform to the RFP. The OWNER also reserves the right to waive minor irregularities and seek modified proposals at any stage in the RFP process.

PRELIMINARY EVALUATION, ESTABLISHMENT OF COMPETITIVE RANGE, AND FURTHER DISCUSSIONS

The Evaluation Committee will conduct a preliminary evaluation of Proposals based on information submitted in writing as part of the proposal package. The Evaluation Committee may also request additional information or modified proposals and may check references. The Evaluation Committee will evaluate the Technical Proposal separately from the Price Proposal.

After completing the preliminary evaluation of Technical and Price Proposals, the Evaluation Committee may establish a competitive range, which, if established, will consist only of the most highly rated proposals that the Evaluation Committee consider sufficiently viable to allow for further consideration. The Evaluation Committee may reject any proposal not in the competitive range or recommend rejection of all proposals. The Evaluation Committee may conduct further discussions with Proposers in the competitive range, or may request additional information or modified proposals from such Proposers. The Evaluation Committee may require that some or all Proposers attend an interview (may be in person or conducted via telephone per WETA's request) in order to answer questions and provide clarification regarding their Proposals. The Evaluation Committee may also conduct site visits of firms in the competitive range.

BEST AND FINAL OFFERS (BAFOS)

WETA may, at any time after establishing a competitive range, determine that it is appropriate to request BAFOs. The request for BAFOs may identify revisions to the RFP and will specify terms and conditions applicable to the BAFOs, including identifying a time and date for delivery. Upon receipt of BAFOs, WETA will re-evaluate the Proposals as revised, and will determine Proposal ratings as appropriate following the process described above. WETA may not request a BAFO and so proposers should submit their best offer with their initial proposal.

If a Proposer does not respond to a request for BAFO, the most recent Proposal submitted will be considered to be the Proposer's BAFO. The cycle of BAFOs may be repeated until the Evaluation Committee determines that the Proposal most advantageous to WETA has been achieved.

FINAL RANKING

After preliminary evaluation of the Price Proposals, the Technical Proposals and any other information collected by the Evaluation Committee, and after BAFO(s), if necessary, the Evaluation Committee will conduct a final ranking of all firms in the competitive range using the same evaluation criteria described above.

NEGOTIATIONS

Upon completion of the evaluation process and determination of the final ranking, the OWNER may accept the highest-ranked proposal or negotiate the terms and conditions of the Agreement with the highest-ranked firm. If negotiations are unsuccessful, the OWNER will terminate the negotiations with that firm and may open negotiations with the next highest-ranked firm. If negotiations with this firm are also not successful, the OWNER may repeat the negotiations process with the next-highest-ranked firms, or, at its sole discretion, the OWNER may reject all remaining proposals.

NOTICE OF INTENT TO AWARD

If the contract is to be awarded, all Proposers will be notified of the Owner's intent to award the contract in advance of any meeting of Owner's Board at which there is a recommendation to award the contract.

MILESTONE SCHEDULE

Prior to contract award, the highest ranked Proposer must provide a milestone schedule for Owner's review and approval. The milestone schedule must include descriptions of work for each milestone. The descriptions of work must use terminology consistent with the Technical Specifications for this RFP, and where applicable, reference the specific sections in the Technical Specifications for this RFP. the milestone schedule must also at a minimum include the milestone descriptions and achievement requirements for Items thirteen (13) through sixteen (16) in the sample milestone schedule included Section 6 of the Sample Agreement in Part C of this RFP. A mutually agreed upon milestone schedule will be incorporated into Section 6 of the final Agreement.

PRICE AND/OR COST ANALYSIS IN THE EVENT OF A SINGLE PROPOSER

The Owner will conduct a price analysis of the highest ranked proposal to support a finding that the price is fair and reasonable. In the event that there is only a single Proposer in the competitive range at the conclusion of evaluation process, the Owner reserves the right to conduct a cost analysis of the Proposer's proposal in accordance with FTA regulations to assess whether the prices offered by the Proposer are fair and reasonable. A price analysis is the process of examining and evaluating a prospective price without evaluation of the separate or underlying cost elements. A cost analysis includes the appropriate verification of cost data, the evaluation of specific elements of cost, and the projection of the data to determine the effect on price. As requested by the Owner, the Proposer must cooperate with the Owner's conduct of a price and/or cost analysis and submit all data necessary to carry out such analyses in such formats as may be prescribed by the Owner. Any such analyses, and the results from such analyses, will not obligate the Owner to accept the single proposal; the Owner retains the right to reject such proposal at its sole discretion.

CONTRACT AWARD AND EXECUTION

The Owner reserves the right to not award any contract as a result of this procurement and may terminate the procurement and commence a new procurement for part or all of the work at any time. Formal contract award will only occur as and when, if at all, the Owner's Board takes such action. The Owner will not reimburse any firm for costs incurred as a result of preparing or submitting a proposal, including negotiating with the Owner on any matter related to this RFP.

If the Owner acts to award the contract, the selected Proposer must execute and deliver execution copies of the contract within ten (10) working days of receipt, together with all required documents, including but not limited to, the Performance Bond and the insurance certificates. If the Proposer is an individual, the contract must be executed by the individual personally. If the Proposer is a co-partnership, it is desirable that the contract be executed by all of the partners, but it may be executed by one (1) of them. If the Proposer is a corporation, this contract must be executed by two corporate officers, consisting of: (1) the president, vice president or chair of the board; and (2) the secretary, assistant secretary, chief financial officer or assistant treasurer. Alternatively, this contract may be executed by a single officer or a person other than an officer provided that evidence satisfactory to the Owner is provided demonstrating that such individual is authorized to bind the corporation (e.g., a copy of a certified resolution from the corporation’s board or a copy of the corporation’s bylaws). If the Proposer is a joint venture, the contract must be executed on behalf of each participating firm by officers or other authorized individuals. If the Proposer is an LLC, the contract must be executed by an officer or member who is authorized to bind the LLC.

PROTEST PROCEDURES

Chapter 5, Article XII, of the Owner's Administrative Code provides that specific protest procedures set forth in an RFP prevail over those that may be included in the Owner's Administrative Code. The following procedures therefore apply.

All Protests should be submitted to the Owner's Executive Director.

Protests based upon restrictive requirements or alleged improprieties in the RFP procedure which are apparent or reasonably should have been discovered prior to the proposal due date, must be filed in writing at least five (5) calendar days prior to the Proposal due date. The protest must clearly specify in writing the grounds and evidence on which the protest is based, and the relief sought. Protesters must first have availed themselves of the procedures for requesting modifications or clarifications of the RFP prior to submitting any protest.

Protests based upon the Owner's notification of intent to award the contract must be submitted in writing by 4pm pacific time on the fifth day after WETA issues the Notice of Intent to Award a contract. Day one is the day after the date on the Notice of Intent to Award. If the fifth day falls on a weekend or holiday, protests must be received no later than 10am pacific time on the first business day after the fifth day. The protest must clearly specify in writing the grounds and evidence on which the protest is based, and the relief sought.

Protests that are received outside of the above time period will be rejected. For timely protests based upon restrictive requirements or alleged improprieties in the RFP procedures, the Executive Director will respond with a written determination prior to the proposal due date. If the Executive Director's determination could affect proposal submission, an appropriate extension of the proposal due date may be granted. The decision of the Executive Director is final.

For timely protests based upon the notice of intent to award, the Executive Director will make efforts to notify other Proposers of the protest. The Executive Director will rule on the protest and will respond with a written determination. The decision of the Executive Director is final.

No protests will be considered after contract award, except for compelling reasons whereby the lateness is due to the Owner's untimely handling of the protest submission. In no event will the Owner consider protests filed after contract award due to the neglect of the protestor. Failure to comply with the time periods for filing protests as set forth in this section will be a basis for rejection of the protest.

LEVINE ACT

The Levine Act (Government Code 84308) is part of the Fair Political Practices Act that applies to elected officials who serve on appointed Boards such as the San Francisco Bay Area Water Emergency Transportation Authority. The Levine Act prohibits any Authority Member who has received $250.00 or more within the previous twelve months from an applicant from participating in or influencing the decision on awarding a contract with the Owner. The Levine Act also requires a member of the Owner's organization who has received such a contribution to disclose the contribution on the record of the proceeding. In addition, Authority Members are prohibited from soliciting or accepting a contribution from a party applying for a contract while the matter of awarding the contract is pending before the Owner or for three months following the date a final decision concerning the contract has been made.

Applicants must disclose on the record any contribution of $250.00 or more that they have made to an Authority Member within the twelve-month period preceding submission of their response to this RFP. This duty applies to your company, any member of your team, any agents for you or other team members and to the major shareholders of any closed corporation that is part of your team. If you made a contribution that needs to be disclosed, you must provide written notice of the date, amount, and receipt of the contribution(s) in writing to the Owner's Executive Director. This information, if any, must accompany your response to this RFP.

CONFIDENTIALITY

1. **Confidentiality Index and Waiver of Claims.** The California Public Records Act (Cal. Govt. Code Sections 6250 et seq.) (CPRA) mandates public access to government records. Therefore, unless the information is exempt from disclosure by law, the content of the proposal, as well as any other written communication between WETA and the Proposer, may be a public record that must be made available to the public.

If the Proposer believes any communication contains information exempt from disclosure under the CPRA, including trade secrets or other proprietary information that the Proposer believes would cause substantial injury to the Proposer's competitive position if disclosed, the Proposer must request that WETA withhold from disclosure the exempt information by marking each page containing such exempt information as confidential and must also submit a separate confidentiality index including all of the following information:

1) The section and page number of the proposal where the information is located.

2) An explanation of why the information is exempt from disclosure under the CPRA.

By submitting a proposal, Proposer: i) consents to the release of any portion of its proposal not included in the confidentiality index; and ii) waives all claims and agrees not to maintain any legal action against WETA, its directors, officers, employees and agents, for the disclosure of such information.

If the Proposer does not include a confidentiality index in its proposal, WETA will have no obligation to withhold any information from disclosure and may release the information sought without liability to WETA.

In the event of conflicts between the confidentiality index and confidentiality designations in the body of the proposal, the confidentiality index prevails.

A Proposer may not designate its entire proposal as confidential nor may a Proposer designate Proposal Forms or its Price Proposal as confidential. WETA will not honor such designations and will disclose submittals so designated to the public.

2. **Confidentiality Indemnity.** Upon receipt of a request pursuant to the CPRA seeking proposal material relating to this RFP, WETA will withhold material designated in the confidentiality index that is exempt from disclosure. If WETA determines that information in the confidentiality index is not exempt from disclosure, WETA will give reasonable notice to Proposer prior to releasing any material listed in the confidentiality index.

By submitting a proposal, Proposer agrees to indemnify, defend, and hold harmless WETA, its directors, officers, employees and agents, from any and against all damages (including but not limited to attorneys' fees that may be awarded to the party requesting the Proposer information), and pay any and all cost and expenses, including attorneys' fees, related to the withholding of the information included in the confidentiality index. If Proposer fails to accept a tender of a defense, WETA reserves the right to resolve all claims at its sole discretion, without limiting any rights stated herein.

EX PARTE COMMUNICATION

Proposers and Proposers' representatives may not communicate orally with an officer, director, employee, or agent of the Owner, outside the procedures set forth in this RFP, until after a Notice to Proceed has been issued by the Owner. Proposers and their representatives are not prohibited, however, from making oral statements or presentations in public to one or more representatives of the Owner during a public meeting. Any written communication regarding the RFP between a Proposer (or the Proposer's representative) and the Owner's General Manager, Board Member, officer, employee or consultant, regardless of who initiates the communication, other than as part of the procurement process set forth in this RFP, before the Owner issues a Notice to Proceed, will be available for disclosure to the general public.

CONFLICT OF INTEREST

By submitting a proposal, the Proposer represents and warrants that no director, officer or employee of the Owner is in any manner interested directly or indirectly in the proposal or in the Agreement which may be made under it or in any expected profits to arise there from, as set forth in Article 4, Division 4, Title I (commencing with Sec. 1090) of the Government Code of the State of California.

The Proposer warrants and represents that it presently has no interest and agrees that it will not acquire any interest which would present a conflict of interest under California Government Code Sections 1090 et seq. or Sections 87100 et seq. during the performance of services under this Agreement. The Proposer further covenants that it will not knowingly employ any person having such an interest in the performance of this Agreement. Violation of this provision may result in this Agreement being deemed void and unenforceable.

Depending on the nature of the work performed, the Proposer may be required to publicly disclose financial interests under the Owner's Conflict of Interest Code. The Proposer agrees to promptly submit a Statement of Economic Interest on the form provided by the Owner upon receipt. No person previously in the position of director, officer, employee or agent of the Owner may act as an agent or attorney for, or otherwise represent, the Proposer by making any formal or informal appearance, or any oral or written communication, before the Owner, or any officer or employee of the Owner, for a period of twelve (12) months after leaving office or employment with the Owner if the appearance or communication is made for the purpose of influencing any action involving the issuance, amendment, awards or revocation of a permit, license, grant or contract.

The Proposer warrants that it has no organizational conflicts of interest at this time. Alternatively, the Proposer must disclose all known organizational conflicts of interest. An organizational conflict of interest occurs when, due to other activities, relationships, or contracts, a firm or person is unable, or potentially unable, to render impartial assistance or advice to the Owner; a firm or person's objectivity in performing the contract work is or might be impaired; or a firm or person has an unfair competitive advantage in proposing for award of a contract as a result of information gained in performance of this or some other agreement.

See Agreement in Part C for additional conflict of interest provisions that will be in effect during the contract term.

NON-COLLUSION

By submitting a proposal in response to this RFP, each Proposer certifies that its proposal is genuine and not a sham or collusive or made in the interest of or on behalf of any person not named therein; that the Proposer has not, directly or indirectly, induced or solicited any other person to submit a sham proposal or any other person to refrain from responding to this RFP; and that the Proposer has not in any manner sought collusion to secure any improper advantage over any other person submitting a response to this RFP.

FEDERAL REQUIREMENTS

This RFP is subject to financial assistance from the U.S. Department of Transportation, Federal Transit Administration (FTA). The selected Contractor agrees to comply with all applicable federal statutes, rules and regulations, including but not limited to the following:

A. FLY AMERICA REQUIREMENTS. The Contractor agrees to comply with 49 U.S.C. 40118 (the "Fly America Act") in accordance with the General Services Administration's regulations at 41 CFR Part 301 - 10, which provide that recipients and subrecipients of Federal funds and their Contractors are required to use U.S. flag air carriers for U.S. Government-financed international air travel and transportation of their personal effects or property to the extent such service is available, unless travel by foreign air carrier is a matter of necessity as defined by the Fly America Act. The Contractor shall submit, if a foreign air carrier was used, an appropriate certification or memorandum adequately explaining why service by a U.S. flag air carrier was not available or why it was necessary to use a foreign air carrier and shall, in any event, provide a certificate of compliance with the Fly America requirements, if used. The Contractor agrees to include the requirements of this Section in all subcontracts that may involve international air transportation.

B. CARGO PREFERENCE REQUIREMENTS. The Contractor agrees: (a) to use privately owned United States Flag commercial vessels to ship at least 50 percent of the gross tonnage (computed separately for dry bulk carriers, dry cargo liners, and tankers) involved, whenever shipping any equipment, material, or commodities pursuant to this Contract by ocean vessels to the extent such vessels are available at fair and reasonable rates for United States-flag commercial vessels; (b) to furnish within 20 working days following the date of loading for shipments originating within the United States or within 30 working days following the date of leading for shipments originating outside the United States, a legible copy of a rated, "on-board" commercial ocean bill-of -lading in English for each shipment of cargo described in the preceding paragraph to the Division of National Cargo, Office of Market Development, Maritime Administration, Washington, DC 20590 and to WETA (through the Contractor in the case of a subcontractor's bill-of-lading); and (c) to include these requirements in all subcontracts issued pursuant to this Contract when the subcontract may involve the transport of equipment, Material, or commodities by ocean vessel.

C. ENERGY CONSERVATION. The Contractor agrees to comply with mandatory standards and policies relating to energy efficiency which are contained in the state energy conservation plan issued in compliance with the Federal Energy Policy and Conservation Act, 42 U.S.C. §§ 6321 et seq.

D. RECYCLED PRODUCTS. The Contractor agrees to provide a preference for those products and services that conserve natural resources, protect the environment, and are energy efficient by complying with and facilitating compliance with Section 6002 of the Resource Conservation and Recovery Act, as amended, 42 U.S.C. § 6962, and U.S. Environmental Protection Agency (U.S. EPA), "Comprehensive Procurement Guideline for Products Containing Recovered Materials," 40 C.F.R. part 247.

E. ACCESS TO RECORDS AND REPORTS. Contractor shall provide all authorized representatives of WETA, the FTA Administrator, the State Auditor and the Comptroller General of the United States access to any books, documents, papers and records of the Contractor which are directly pertinent to this Contract for the purposes of making audits, copies, examinations, excerpts and transcriptions. Contractor also agrees to maintain all books, records, accounts and reports required under this Contract for a period of not less than three years after the date of termination or expiration of this Contract, except in the event of litigation or settlement of claims arising from the performance of this Contract, in which case Contractor agrees to maintain the same until WETA, the FTA Administrator, the Comptroller General, or any of their duly authorized representatives, have disposed of all such litigation, appeals, claims or exceptions related thereto.

F. FEDERAL CHANGES. Contractor shall at all times comply with all applicable FTA regulations, policies, procedures and directives, including without limitation those listed directly or by reference in the Agreement (Form FTA MA (26) dated October 1, 2019) between WETA and the FTA , as they may be amended or promulgated from time to time during the term of this Contract. Contractor's failure to so comply shall constitute a material breach of this Contract.

G. NO GOVERNMENT OBLIGATION TO THIRD PARTIES.

1. WETA and Contractor acknowledge and agree that, notwithstanding any concurrence by the Federal Government in or approval of the solicitation or award of the underlying contract, absent the express written consent by the Federal Government, the Federal Government is not a party to this Contract and shall

not be subject to any obligations or liabilities to WETA, Contractor, or any other party (whether or not a party to that contract) pertaining to any matter resulting from the underlying contract.

2. The Contractor agrees to include the above clause in each subcontract financed in whole or in part with Federal assistance provided by FTA. It is further agreed that the clause shall not be modified, except to identify the subcontractor/subconsultant who will be subject to its provisions.

H. PROGRAM FRAUD AND FALSE OR FRAUDULENT STATEMENTS AND RELATED ACTS.

1. The Contractor acknowledges that the provisions of the Program Fraud Civil Remedies Act of 1986, as amended, 31 U.S.C. § 3801 et seq. and U.S. DOT regulations, "Program Fraud Civil Remedies," 49 CFR Part 31, apply to its actions pertaining to this Project. Upon execution of the underlying contract, the Contractor certifies or affirms the truthfulness and accuracy of any statement it has made, it makes, it may make, or causes to be made, pertaining to the underlying contract or the FTA assisted project for which this Contract work is being performed. In addition to other penalties that may be applicable, the Contractor further acknowledges that if it makes, or causes to be made, a false, fictitious, or fraudulent claim, statement, submission, or certification, the Federal Government reserves the right to impose the penalties of the Program Fraud Civil Remedies Act of 1986 on the Contractor to the extent the Federal Government deems appropriate.

2. The Contractor also acknowledges that if it makes, or causes to be made, a false, fictitious, or fraudulent claim, statement, submission, or certification to the Federal Government under a contract connected with a project that is financed in whole or in part with Federal assistance originally awarded by FTA under the authority of 49 U.S.C. § 5307, the Government reserves the right to impose the penalties of 18 U.S.C. § 1001 and 49 U.S.C. § 5353(l) on the Contractor , to the extent the Federal Government deems appropriate.

3. The Contractor agrees to include the above two clauses in each subcontract financed in whole or in part with Federal assistance provided by FTA. It is further agreed that the clauses shall not be modified, except to identify the subcontractor/subconsultant who will be subject to the provisions.

I. CIVIL RIGHTS REQUIREMENTS. The following requirements apply to the underlying contract:

1. Nondiscrimination - In accordance with Title VI of the Civil Rights Act, as amended, 42 U.S.C. § 2000d, section 303 of the Age Discrimination Act of 1975, as amended, 42 U.S.C. § 6102, section 202 of the Americans with Disabilities Act of 1990, 42 U.S.C. § 12132, and Federal transit law at 49 U.S.C. § 5332, the Contractor agrees that it will not discriminate against any employee or applicant for employment because of race, color, creed, national origin, sex, age, or disability. In addition, the Contractor agrees to comply with applicable Federal implementing regulations and other implementing requirements FTA may issue.

2. Equal Employment Opportunity - The following equal employment opportunity requirements apply to the underlying contract:

i. Race, Color, Creed, National Origin, Sex - In accordance with Title VII of the Civil Rights Act, as amended, 42 U.S.C. § 2000e, and Federal transit laws at 49 U.S.C. § 5332, the Contractor agrees to comply with all applicable equal employment opportunity requirements of U.S. Department of Labor (U.S. DOL) regulations, "Office of Federal Contract Compliance Programs, Equal Employment Opportunity, Department of

Labor," 41 CFR Parts 60 et seq ., (which implement Executive Order No. 11246, "Equal Employment Opportunity," as amended by Executive Order No. 11375, "Amending Executive Order 11246 Relating to Equal Employment Opportunity," 42 U.S.C. § 2000e note), and with any applicable Federal statutes, executive orders, regulations, and Federal policies that may in the future affect construction activities undertaken in the course of the Project. The Contractor agrees to take affirmative action to ensure that applicants are employed, and that employees are treated during employment, without regard to their race, color, creed, national origin, sex, or age. Such action shall include, but not be limited to, the following: employment, upgrading, demotion or transfer, recruitment or recruitment advertising, layoff or termination; rates of pay or other forms of compensation; and selection for training, including apprenticeship. In addition, the Contractor agrees to comply with any implementing requirements FTA may issue.

ii. Age - In accordance with section 4 of the Age Discrimination in Employment Act of 1967, as amended, 29 U.S.C. § 623 and Federal transit law at 49 U.S.C. § 5332, the Contractor agrees to refrain from discrimination against present and prospective employees for reason of age. In addition, the Contractor agrees to comply with any implementing requirements FTA may issue.

iii. Disabilities - In accordance with section 102 of the Americans with Disabilities Act, as amended, 42 U.S.C. § 12112, the Contractor agrees that it will comply with the requirements of U.S. Equal Employment Opportunity Commission, "Regulations to Implement the Equal Employment Provisions of the Americans with Disabilities Act," 29 CFR Part 1630, pertaining to employment of persons with disabilities. In addition, the Contractor agrees to comply with any implementing requirements FTA may issue.

3. The Contractor also agrees to include these requirements in each subcontract financed in whole or in part with Federal assistance provided by FTA, modified only if necessary to identify the affected parties.

J. DISADVANTAGED BUSINESS ENTERPRISE (DBE) REQUIREMENTS.

WETA is committed to and has adopted a DBE Program for the participation of DBEs in WETA contracting opportunities in accordance with Federal Regulation 49 CFR, Part 26, effective March 4, 1999, as may be amended, (the “DBE Program”), the terms and conditions of which are incorporated by this reference. It is the policy of WETA to ensure nondiscrimination on the basis of race, color, sex, or national origin in the award and administration of US DOT assisted contracts and to create a level playing field on which DBEs and SBEs can compete fairly for contracts and subcontracts relating to WETA’s construction, procurement and professional services activities. To this end, WETA has developed procedures to remove barriers to DBE and SBE participation in the bidding and award process and to assist DBEs and SBEs to develop and compete successfully outside the DBE Program. In connection with the performance of the Contract, the Contractor will cooperate with WETA in meeting these commitments and objectives.

WETA has established a 1.58% DBE Project Goal for this project. The Offeror must indicate in its proposal its intention to satisfy the 1.58% DBE Project Goal or provide adequate good faith effort documentation of its efforts to satisfy the 1.58% DBE Project Goal. Proposals that do not include DBE participation or adequate good faith efforts documentation to satisfy the 1.58% DBE Project Goal will be rejected. Good faith effort documentation includes but is not limited to two-way communications with DBE firms aimed at establishing a contract, verifiable reasons as to why a contract did not result and advertising of the Offeror’s attempt at gaining DBE participation. Documentation must be submitted on the DBE forms contained in Part D: (1) Prime

Consultant and Subcontractors/Sub-consultants/Suppliers Report; and (2) Good Faith Efforts Description. Please be sure to submit the Small Business Enterprise (SBE) Affidavit of Size for your firm, if applicable, and for any SBE subcontractors/subconsultants/suppliers proposed to perform the Services. For more information on the 1.58% Project Goal and how to find DBEs, please see https://weta.sanfranciscobayferry.com/vessel-construction-webinar. WETA's DBE Program is available at https://weta.sanfranciscobayferry.com/sites/default/files/weta/dbe/WETA_DBE_0816.pdf. For information and questions concerning DBE/SBE programs, contact the WETA DBE Administrator Lauren Gularte at gularte@watertransit.org or (415) 364-3188.

Title 49, Code of Federal Regulations, Part 26 ("DBE Rule") provides guidance to grantees on the use of overall and contract goals, requirement to include DBE provisions in subcontracts, evaluating DBE participation where specific contract goals have been set, reporting requirements, and replacement of DBE subcontractors. Additionally, the DBE Rule dictates payment terms and conditions (including limitations on retention) applicable to all subcontractors regardless of whether they are DBE firms or not.

The DBE Rule applies to all DOT-assisted contracting activities. A formal clause such as that below must be included in all contracts above the micro-purchase level. The requirements of clause subsection 1 flow down to subcontracts.

A substantial change to the payment provisions in this newest version of 49 CFR Part 26 concerns retention (see section 26.29). Grantee choices concerning retention should be reflected in the language choices in clause subsection 3.

Clause Language:

The following clause language is mandatory. It incorporates the payment terms and conditions applicable to all subcontractors based in Part 26 as well as those related only to DBE subcontractors.

1. The Contractor shall not discriminate on the basis of race, color, national origin, or sex in the performance of this contract. The Contractor shall carry out applicable requirements of 49 CFR Part 26 in the award and administration of this DOT-assisted contract. Failure by the Contractor to carry out these requirements is a material breach of this contract, which may result in the termination of this contract or such other remedy as WETA deems appropriate, which may include but is not limited to: (1) Withholding monthly progress payments; (2) Assessing sanctions; (3) Liquidated damages; and/or (4) Disqualifying the contractor from future bidding as non-responsible. Each subcontract the Contractor signs with a subcontractor must include the assurance in this paragraph (see 49 CFR 26.13(b)).

2. Bidders/Offerors are required to document sufficient DBE/SBE participation or, alternatively, document adequate good faith efforts to do so, as provided for in 49 CFR 26.53. Award of this contract is conditioned on submission of the following concurrent with and accompanying an initial proposal:

   i. The names and addresses of DBE/SBE firms that will participate in this contract;

   ii. A description of the work each DBE/SBE will perform;

iii. The dollar amount of the participation of each DBE/SBE firm participating;

iv. Written documentation of the bidder/Offeror's commitment to use a DBE/SBE subcontractor whose participation it submits to meet the contract goal;

v. Written confirmation from the DBE/SBE that it is participating in the contract as provided in the prime Contractor's commitment; and

vi. If not able to obtain DBE/SBE participation, evidence of good faith efforts to do so.

Bidders/Offerors must present the information required above with initial proposals (see 49 CFR 26.53(b)(3)).

The successful Bidder/Offeror will be required to report its DBE participation obtained through race-neutral means throughout the period of performance.

3. The Contractor is required to pay its subcontractors performing work related to this contract for satisfactory performance of that work no later than 30 days after the Contractor's receipt of payment for that work from WETA. In addition, the Contractor is required to return any retention payments to those subcontractors within 30 days after the subcontractor's work related to this contract is satisfactorily completed.

4. The Contractor must promptly notify WETA, whenever a DBE subcontractor performing work related to this contract is terminated or fails to complete its work and must make good faith efforts to engage another DBE subcontractor to perform at least the same amount of work. The Contractor may not terminate any DBE subcontractor and perform that work through its own forces or those of an affiliate without prior written consent of WETA.

K. SAFE OPERATION OF MOTOR VEHICLES. The Contractor is encouraged to adopt and promote on-the-job seat belt use policies and programs for its employees and other personnel that operate company-owned vehicles, company-rented vehicles, or personally operated vehicles. The terms "company-owned" and "company-leased" refer to vehicles owned or leased either by the Contractor or WETA. The Contractor agrees to adopt and enforce workplace safety policies to decrease crashes caused by distracted drivers, including policies to ban text messaging while using an electronic device supplied by an employer, and driving a vehicle the driver owns or rents, a vehicle Contractor owns, leases, or rents, or a privately-owned vehicle when on official business in connection with the work performed under this agreement.

L CONTRACT WORK HOURS AND SAFETY STANDARDS ACT. The Contractor shall comply with all federal laws, regulations, and requirements providing wage and hour protections for non-construction employees, in accordance with 40 U.S.C. § 3702, Contract Work Hours and Safety Standards Act, and other relevant parts of that Act, 40 U.S.C. § 3701 et seq., and U.S. DOL regulations, "Labor Standards Provisions Applicable to Contracts Covering Federally Financed and Assisted Construction (also Labor Standards Provisions Applicable to Non-construction Contracts Subject to the Contract Work Hours and Safety Standards Act)," 29 C.F.R. part 5.

The Contractor shall maintain payrolls and basic payroll records during the course of the work and shall preserve them for a period of three (3) years from the completion of the contract for all laborers and mechanics,

including guards and watchmen, working on the contract. Such records shall contain the name and address of each such employee, social security number, correct classifications, hourly rates of wages paid, daily and weekly number of hours worked, deductions made, and actual wages paid.

Such records maintained under this paragraph shall be made available by the Contractor for inspection, copying, or transcription by authorized representatives of the FTA and the Department of Labor, and the Contractor will permit such representatives to interview employees during working hours on the job.

The contractor shall require the inclusion of the language of this clause within subcontracts of all tiers.

M. BUY AMERICA COMPLIANCE. The Contractor agrees to comply with 49 U.S.C. 5323(j) and 49 CFR Part 661. This vessel procurement is subject to the Buy America statutory waiver for rolling stock procurements. The Contractor agrees that the cost of components and subcomponents produced in the United States must be more than 70% of the cost of all components used to rebuild the ferry and final assembly of the ferry must take place in the United States. All proposers must submit the appropriate Buy America certifications to WETA with their proposals. Proposals that are not accompanied by a completed Buy America certification must be rejected as nonresponsive. This requirement does not apply to lower tier subcontractors. The Contractor agrees to comply with the applicable Buy America Audit requirements set forth in 49 U.S.C. § 5323(l) and FTA's implementing regulation at 49 C.F.R. Part 663.

The Contractor will cooperate with WETA in conducting all review necessary to ensure compliance with the Buy America requirements. The Contractor is required to submit documentation which lists component and subcomponent parts identified by manufacturer of the parts, their country of origin, and costs, and must cooperate in preparation of the necessary Buy America audits. Such submittal and audit may be required both before Contract award and prior to delivery of the vessels.

In light of the FTA's advice restricting the granting of Buy America waivers and the need to proceed with this project without delay, WETA will not award a contract to a proposer that does not certify compliance with the Buy America requirements on the Buy America Certificate, as such a submission will be considered nonresponsive to the requirements of this specification. Proposers should notify WETA during the request for clarifications period if they have questions regarding the Buy America requirements.

N. CLEAN WATER AND AIR REQUIREMENTS. The Contractor agrees to comply with all applicable standards, orders or regulations issued pursuant to the Federal Water Pollution Control Act, as amended, 33 U.S.C. 1251 et seq., and the Clean Air Act, as amended, 42 U.S.C. 7401 et seq. The Contractor agrees to report each violation to WETA and understands and agrees that WETA will, in turn, report each violation as required to assure notification to the FTA and the appropriate EPA regional office.

The Contractor also agrees to include these requirements in each subcontract exceeding $150,000 financed in part or in whole with federal assistance provided by the FTA.

O. GOVERNMENT-WIDE DEBARMENT AND SUSPENSION. This contract is a covered transaction for purposes of 2 CFR Parts 180. As such, the Contractor is required to verify that none of the Contractor, its

principals, as defined at 2 CFR 180.995, or affiliates, as defined at 2 CFR 180.905, are excluded or disqualified as defined at 2 CFR 180.940 and 180.935.

The Contractor is required to comply with 2 CFR Part 180, Subpart C and must include the requirement to comply with 2 CFR Part 180, Subpart C in any lower tier covered transaction it enters into.

By signing and submitting its proposal, Offeror certifies as follows:

The certification in this clause is a material representation of fact relied upon by WETA. If it is later determined that the proposer knowingly rendered an erroneous certification, in addition to remedies available to WETA, the Federal Government may pursue available remedies, including but not limited to suspension and/or debarment. The bidder or proposer agrees to comply with the requirements of 2 CFR Part 180, Subpart C while this offer is valid and throughout the period of any contract that may arise from this offer. The bidder or proposer further agrees to include a provision requiring such compliance in its lower tier covered transactions.

P. LOBBYING. Proposer shall file the certification required by 49 CFR Part 20, "New Restrictions on Lobbying." Proposer shall certify that it will not and has not used Federally appropriated funds to pay any person or organization for influencing or attempting to influence an officer or employee of any agency, a member of Congress, officer or employee of Congress, or an employee of a member of Congress in connection with obtaining any Federal contract, grant or any other award covered by 31 U.S.C. 1352. Proposer shall also disclose the name of any registrant under the Lobbying Disclosure Act of 1995 who has made lobbying contacts on its behalf with non-Federal funds with respect to that Federal contract, grant or award covered by 31 U.S.C. 1352. Such disclosures shall be forwarded to WETA. Proposer shall ensure that all of its subcontractors/subconsultants under this Contract shall certify the same. WETA is responsible for keeping the certification of the Contractor, who is in turn responsible for keeping the certification forms of subcontractors/subconsultants.

The Proposer must complete Standard WETA form, "Disclosure of Lobbying Activities," in accordance with its instructions, in Part D.

Q. INCORPORATION OF FEDERAL TRANSIT ADMINISTRATION (FTA) TERMS. The preceding provisions include, in part, certain Standard Terms and Conditions required by U.S. DOT, whether or not expressly set forth in the preceding contract provisions. All contractual provisions required by the U.S. DOT, as set forth in FTA Circular 4220.1F, dated March 18, 2013 as may be amended, are hereby incorporated by reference. Anything to the contrary herein notwithstanding, all FTA mandated terms shall be deemed to control in the event of a conflict with other provisions contained in this Contract. The Contractor shall not perform any act, fail to perform any act, or refuse to comply with any WETA requests which would cause WETA to be in violation of the FTA terms and conditions.

R. VETERANS HIRING. To the extent practicable, the Contractor agrees that it and its subcontractors:

1. Will give a hiring preference to veterans (as defined in section 2108 of title 5) who have the requisite skills and abilities to perform the construction work required under a third party contract in connection with a capital project supported with funds made available or appropriated for 49 U.S.C. chapter 53, and

2. Will not be required to give a preference to any veteran over any equally qualified applicant who is a member of any racial or ethnic minority, female, an individual with a disability, or a former employee.

S. NOTIFICATION OF LEGAL MATTERS THAT MAY AFFECT FEDERAL INTERESTS. Contractor will notify WETA, the FTA Chief Counsel and FTA Regional Counsel for Region IX if a current or prospective legal matter that may affect the Federal Government emerges in connection with this Contract.

-END OF RFP PART A-

Bay Breeze and Solano Replacement Vessels

19-013

Vessel Technical Specifications

20 May 2020

Revision A

SAN FRANCISCO BAY AREA
WATER EMERGENCY
TRANSPORTATION AUTHORITY

TABLE OF CONTENTS

000 GENERAL REQUIREMENTS

020 PURPOSE

The OWNER has requested a qualified shipyard ("CONTR") to design, construct and deliver two (2) passenger-only ferry vessel ("Vessel") with an option for one additional vessel for operation in the San Francisco Bay Area.

030 OWNER'S REQUIREMENTS VS. OWNER'S PREFERENCES

The purpose of the OWNER's Requirements and Preferences is to convey to the CONTR what features and attributes the OWNER seeks in the new Vessel. The CONTR should incorporate these preferences, to the greatest extent possible, into the execution of the contract.

Certain performance requirements and technical aspects of the design are considered critical and absolute. These shall be referred to as the **OWNER'S REQUIREMENTS**. These requirements are of the highest priority to the OWNER and shall be met to the fullest extent possible, without compromise.

Maintaining commonality across the vessels in the OWNER's fleet is very desirable as it minimizes training requirements and standardizes maintenance and spare parts inventories while minimizing downtime. These common features, equipment and configurations are referred to as the **OWNER'S PREFERENCES**. While not absolute requirements, the desired features described in this document are being provided to assist the CONTR with proposing a Vessel that will integrate with the existing fleet.

For the purpose of this document, OWNER's Requirements are generally preceded by the word "shall" or presented in tabular form. Wherever an equipment manufacturer and/or model number is provided it will be deemed an OWNER Preference.

040 OVERVIEW

The OWNER requires a turn-key Vessel fully complete in every regard, built in compliance with applicable regulatory requirements, inspected and documented by the U.S. Coast Guard and ready for passenger service. The design of the vessel during the modeling and drawing process shall be reviewed and approved by the OWNER prior to construction. Reference section 810 for design engineering requirements.

Two (2) passenger only 46 CFR Subchapter "K" catamaran designed and constructed for efficient and reliable ferry service multiple existing and future routes on the San Francisco bay. The vessel is not intended as the primary vessel on any specific route, rather as an alternate vessel that is able to be employed as needed to service any of the designated routes.

In general, the OWNER is seeking a Vessel based on a proven design or parent craft. The overall emphasis should be on functional utility, high quality construction detailing, passenger comfort, ease of maintenance, ease of repair and longevity. High technology systems and equipment containing levels of control and automation that exceed regulatory requirements are neither required nor desired. The Vessel shall contain simple, well-proven, robust equipment and control systems. Vessel start-up procedures are to be based on a single operator preforming all daily system checks and tasks within fifteen (15) minutes. Port and starboard hulls should have equipment and system layouts as similar as possible.

The CONTR shall be responsible for developing the design solutions and details consistent with the Technical Specifications and other requirements of the contract, including but not limited to, the identification, provision and

installation of all necessary materials and obtaining all regulatory approvals and certifications. The CONTR shall utilize proven marine technology.

The new vessel shall be constructed and finished to the same high standard of recent WETA newbuilds such as the HYDRUS and PYXIS class vessels and recent refits such as the GEMINI class vessels.

Where no particular preference is stated, the CONTR should offer its best standard equipment and installation when considering regulatory requirements, good marine practice, past experience and quality.

050 MISSION

The Vessel shall be operated as a commuter ferry that will serve a varied clientele including local residents and tourists. The primary mission of the vessel is to provide safe, efficient, reliable and comfortable transportation.

060 OPERATIONAL REQUIREMENTS

The vessel will operate in the inner harbor of San Francisco Bay between various combinations of the OWNER's existing and future ferry terminals shown in Section 061. The variation in the routes which range from long-range, high-speed trips to short duration trips with multiple stops. High passenger counts and ever-increasing bicycle ridership present significant operational challenges, which are further described in Sections 061 through 064.

061 ROUTE(S)

The vessel will primarily provide commuter service on a scheduled basis between several inner harbor terminals. The location of these terminals is shown for reference in Figure 061-2. Inner harbor operations present significant operational and reliability challenges due to multiple maneuvering and docking evolutions, short duration high speed segments and intermittent low speed segments. Figures 061-3 through 061-7 show the typical operating profiles for common routes. The required operational profiles can be very demanding on the propulsion machinery and structure.

<u>The CONTR shall take special care during the design of the Vessel and selection of all propulsion machinery to account for any detrimental effects associated with the operating profiles.</u>

	Terminal	Location
1	San Francisco Ferry Terminal	Pier 1, San Francisco
2	Clay Street Terminal	Jack London Square, Oakland
3	Alameda Main Street Terminal	Alameda
4	Harbor Bay Terminal	Bay Farm Island, Alameda
5	South San Francisco Terminal	Oyster Point
6	Richmond Terminal	Richmond
7	Vallejo Terminal	Vallejo

Figure 061-1 WETA Ferry Terminals

Figure 061-2 WETA Ferry Terminals

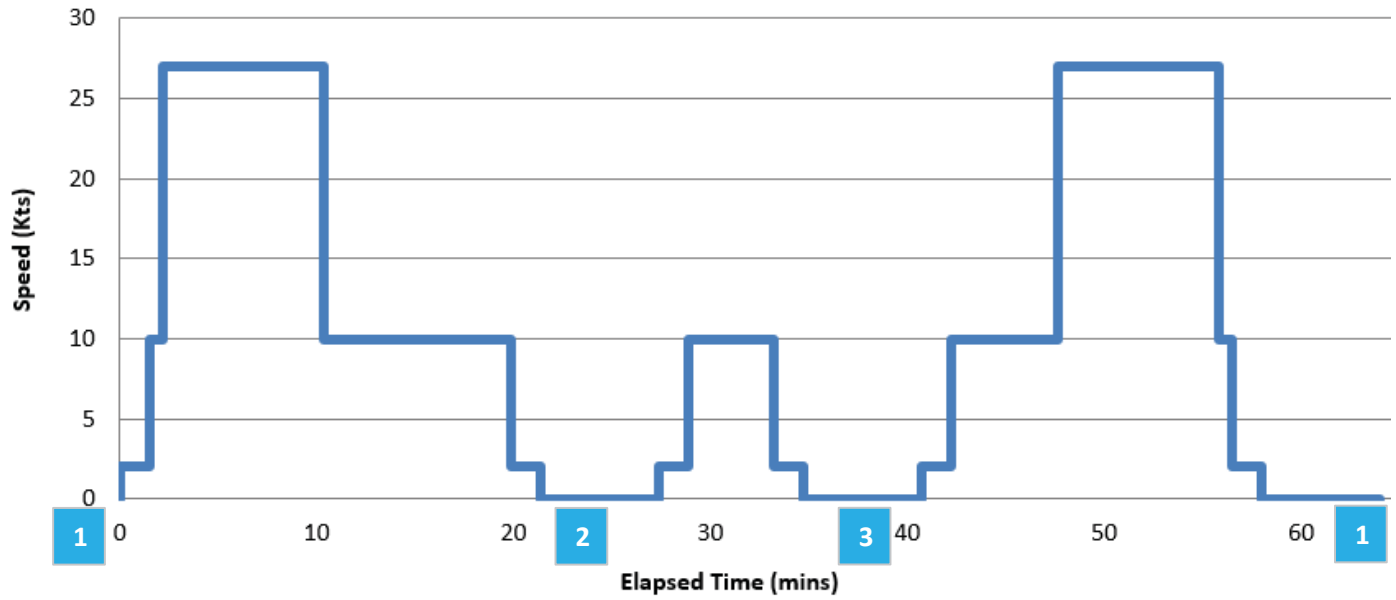

Figure 061-3 – Central Bay (SF-Oakland-Alameda Roundtrip)

Green boxes indicate terminal, Fig. 061-1

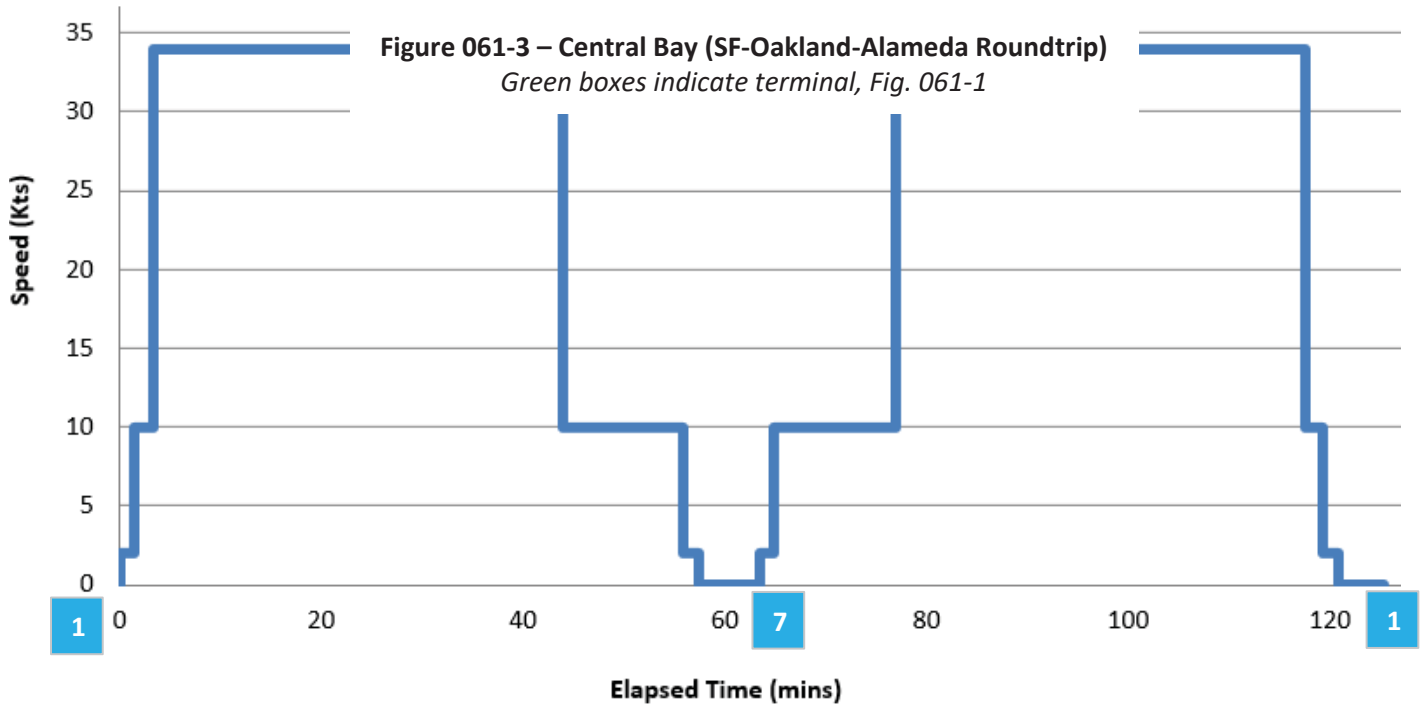

Figure 061-4 – Vallejo (SF-Vallejo Roundtrip)

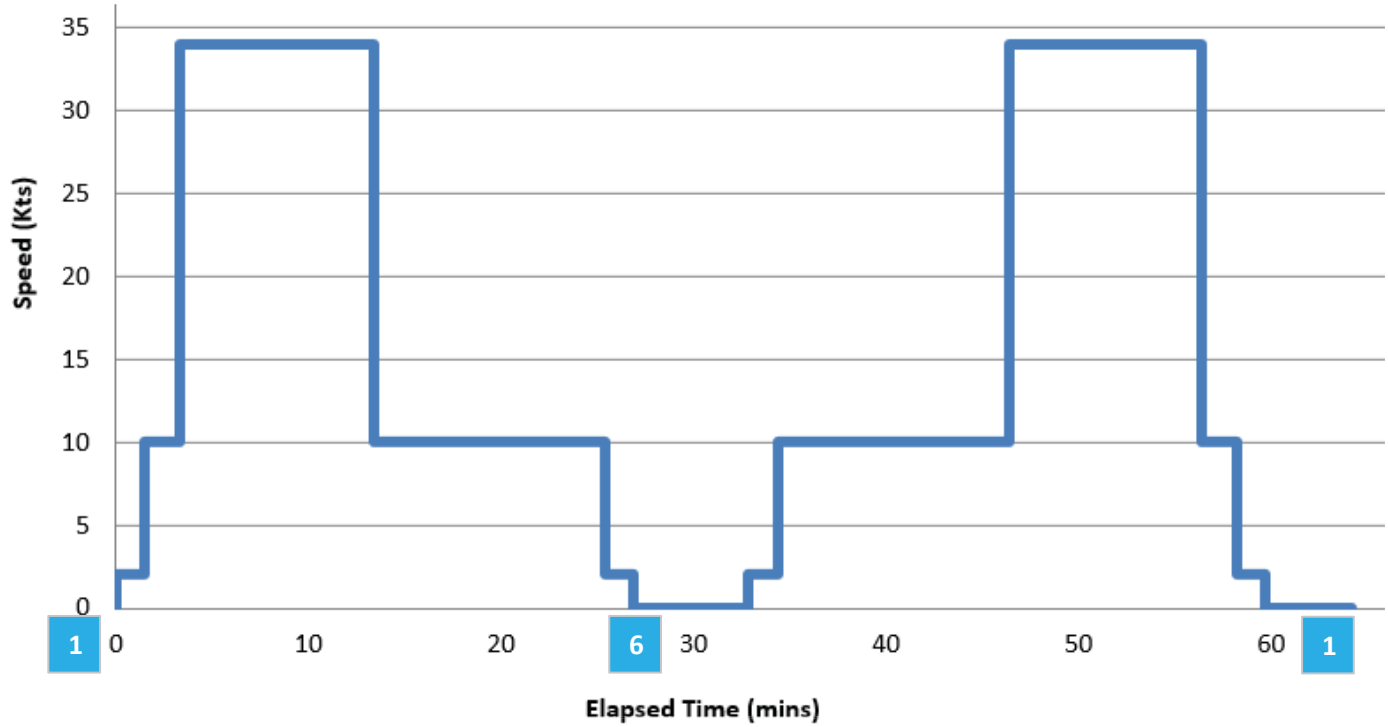

`

Figure 061-5 – Richmond (SF-Richmond Roundtrip)

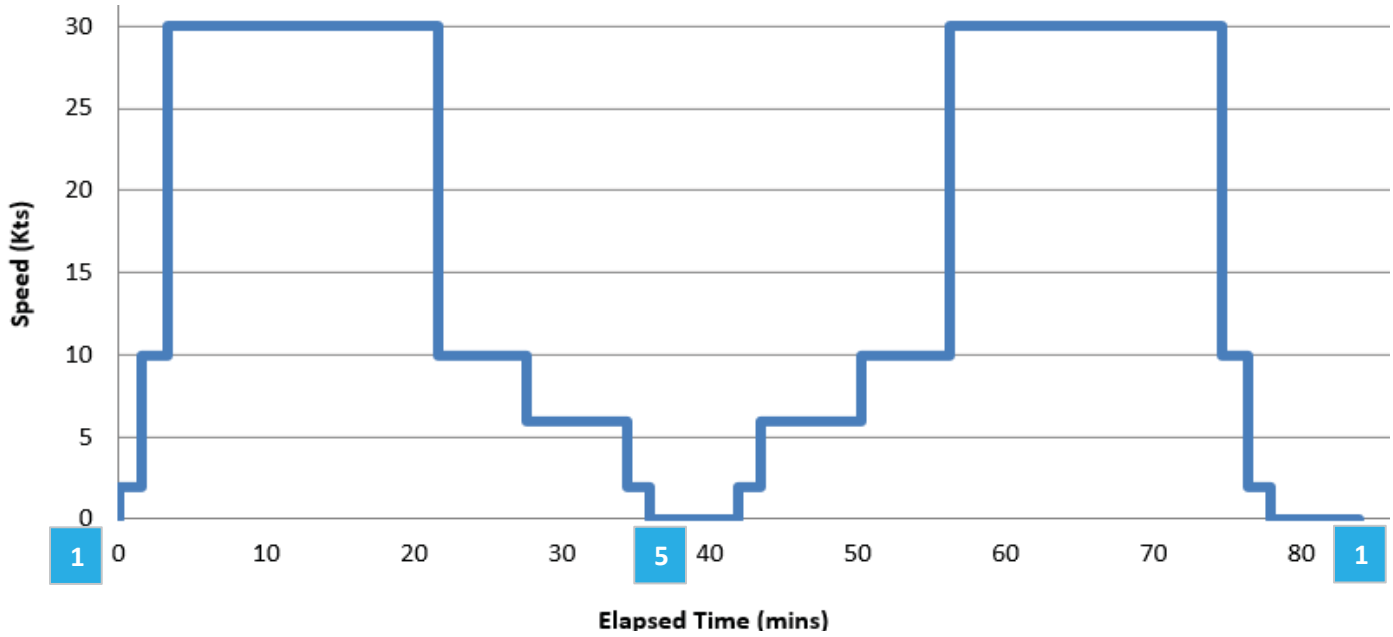

Figure 061-6 – South San Francisco (SF-South SF Roundtrip)

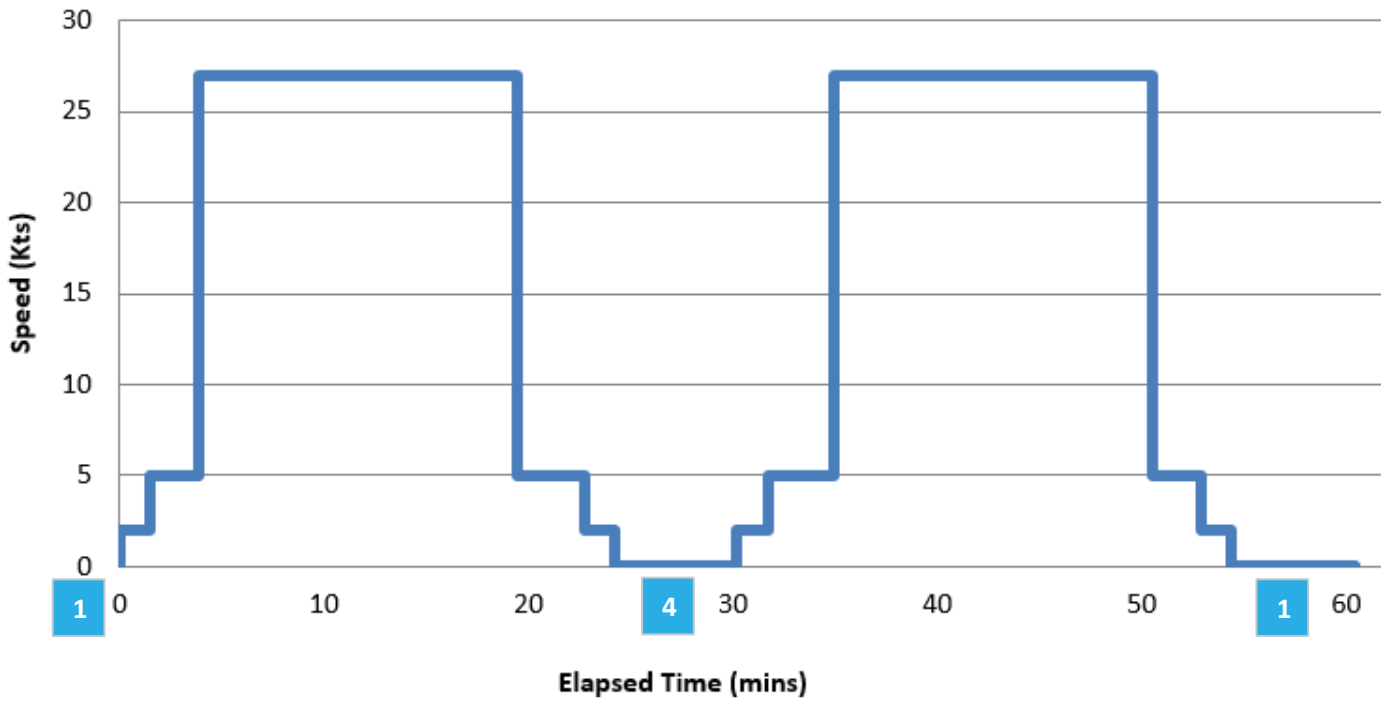

Figure 061-7 – Harbor Bay (SF-Harbor Bay Roundtrip)

062 LOAD PROFILES

The typical engine load profile and operational frequency for the routes outlined in Section 061 is provided for informational purposes in Table 062-1.

Figure 062-1 – Load Profiles					
Route	**Central Bay**	**Vallejo**	**Richmond**	**South SF**	**Harbor Bay**
Engine Load Profile					
Idle	34%	17%	25%	37%	44%
Maneuvering	13%	4%	8%	6%	9%
Transit (10 Knots restricted)	29%	20%	38%	17%	0%
Transit (Service Speed)	23%	58%	28%	39%	47%
Trip Frequency					
Round Trips/Day	6	4	4	4	3

The required design service life of the Vessel is twenty-five (25) years or approximately 90,000 operating hours.

063 LOADING/OFFLOADING

The vessel shall be designed in such a way as to facilitate the safe and efficient transfer of passengers and their belongings within the maximum times per disembarkation/embarkation evolution shown in Table 063-1. The assumption is that ninety-five percent (95%) of passengers are regular commuters, disembarkation and embarkation are not simultaneous, and there are no landside constraints.

Table 063-1 – Typical Loading/Offloading Cycle

	Passengers	Passengers with Bicycles	Total	Maximum Time
Evolution A				
DISEMBARK	270	50	320	6 minutes
EMBARK	25	3	28	
Evolution B				
DISEMBARK	25	3	28	6 minutes
EMBARK	270	50	320	

064 LOADING FACILITIES FOR PASSENGERS

ADA requirements shall be met by the CONTR's design in accordance with the ADA Guidelines of Section 092.

Safety treads or non-skid material shall be installed on the traffic areas of all boarding areas, see Section 634.

The CONTR shall provide stanchions, with chains or barriers, and hooks to cordon off the boarding areas from the main passenger cabin. These items shall be 316 stainless steel.

The CONTR shall ensure that the Vessel being offered is compatible with existing terminal facilities. The Vessel shall be equipped with forward and aft embarkation stations that are compatible with the dimensions shown in Appendix B. The CONTR shall briefly document their plan for fulfilling these obligations by submitting a Boarding Plan.

The Boarding Plan must be approved by the OWNER before the start of construction. OWNER approval of the vessel General Arrangement (GA) drawing and written confirmation of OWNER acceptance of the boarding arrangement per the GA will be considered to satisfy this requirement.

065 WAKE WASH AND SPEED RESTRICTIONS

Certain segments of the operating route in the Oakland Estuary are speed restricted due to wake wash and port traffic. Vessel speed is typically limited to 10.0 knots in these areas. The Vessel shall exhibit low wake wash characteristics at a restricted cruising speed of 10.0 knots. Although not required, a Vessel that exhibits low wake wash characteristics at speeds above 10.0 knots is desirable, and the CONTR is encouraged to offer such a Vessel.

The CONTR’s Vessel design shall minimize adverse effect of wake and propulsor wash on marinas, small craft, beaches, wetlands and other ecosystems. These elements shall be characterized by the wave height and wave energy of the proposed design’s wave and propulsor wash signatures while in the full load end-of-service-life condition, inclusive of all exercised options and service life margins defined in Section 810.

The wave and propulsor wash signatures shall be based on a water surface elevation versus time record of a longitudinal wave cut measured on a track 984' (300 m) to one side of the Vessel's straight-line course in water with a minimum depth of 100'.

Wave Energy (E): The unit wave energy is calculated with the following equation:

$E = 40.97H^2T^2$ [lb·ft/ft]

Wave Height (H): The greatest vertical distance measured between an adjacent trough and crest in the longitudinal wave cut of the Vessel's wake/propulsor wash, in feet.

Wave Period (T): The time between the zero-crossing of the start of the highest wave and the zero crossing of the start of the next wave in the series, measured from the longitudinal wave cut of the Vessel's wake/propulsor wash, in seconds.

CONTR shall Propose that the design's wake and propulsor wash have a wave height and a wave energy less than the maximum values shown in Table 065-1 at the restricted cruising speed of 10 knots or greater up the highest speed obtainable without exceeding the wake/propulsor wash criteria.

Table 065-1 – Wake/Propulsor Wash Criteria Values

Maximum Values		Target Values	
Wave Height ft	**Wave Energy** lb·ft/ft	**Wave Height** ft	**Wave Energy** lb·ft/ft
0.75	630	0.62	430

The CONTR shall provide documentation in the form of CFD analysis and/or actual data from parent craft that demonstrates the Vessel's anticipated wake wash characteristics.

066 START UP AND SHUTDOWN

All systems shall be set up with efficiency in mind so that a single trained operator can start up or secure the Vessel in no more than fifteen (15) minutes including safety walkthrough, system alignment, level checks for generators, main engines, controls and navigation, and auxiliary systems. The CONTR shall demonstrate both a system start up and shutdown in the presence of the owner for final sign off. A system start-up checklist shall be developed and provided by the CONTR. Switch from remote to local from engine room and pilothouse?

070 ENVIRONMENTAL CONDITIONS

The CONTR shall provide a Vessel suitable for operation in the weather and sea conditions regularly found in the San Francisco Bay region of California.

The Vessel shall be able to meet all contract obligations for route turnaround time, seakeeping, and maneuverability under the following environmental conditions:

- Significant wave height: 4.5'.
- Wind velocity: 35 knots with gusts to 45 knots.
- Minimum ambient air temperature: 30°F.
- Maximum ambient air temperature: 105°F.
- Minimum ambient sea water temperature: 45°F.
- Maximum ambient sea water temperature: 70°F.

080 VESSEL REQUIREMENTS

Certain routes have unique physical limitations and performance requirements that must be met to adequately service that route such as speed, passenger capacity, length and beam restrictions. Other performance attributes such as low wake wash and increased maneuverability are desirable rather than absolute requirements and can be managed operationally.

The OWNER recognizes that a vessel that satisfies all the requirements, both absolute and desired, is unlikely to exist as a parent craft and has therefore created trade space for each of the key parameters in the form of **Threshold** and **Objective** Requirements described in the Table in Section 081 below.

The Vessel must meet the threshold requirement for each of the principal characteristics.

The key performance requirements and characteristics for the Vessel are described in Sections 081 through 089.

081 PRINCIPAL CHARACTERISTICS

Principal characteristics for the Vessel shall fall within the ranges outlined below:

Table 081-1 – Principal Operating Characteristics

Characteristic	Threshold	Objective	SWBS Ref.
Hullform	Catamaran		-
Hull Material	Aluminum or approved USCG sub chapter K materials		101
Regulatory Tonnage	Less than 100 GRT		091
Classification	Designed & built to class rules, but not classed		091
Regulatory	United States Coast Guard - Subchapter K		091
Length (overall)	**135' max including appendages**		-
Beam (molded)	35'	≥ 30'	-
Draft Max (incl. appendages)[1]	4'-6"	4'-0"	-
Freeboard	See Appendix B		064
Enclosed Decks	2	1	601
Main Engines	Diesel Internal Combustion		233
Fuel Type	USLD	R-99	200
Propulsors	Waterjets		247
Service Speed	34 knots	37 knots	082
Passengers	320	320	084
Interior Seats	245	320	084
Exterior Seats	50	75	084
Crew	4 max		085
Bicycle Capacity	30	40	672
Fuel Capacity	100% daily required	150% daily required	126

~~**1. Values in the Design column are proposed by the CONTR as design goals or parameters and are not contractual requirements for performance.**~~

1. "Draft Max" is vessel draft at full load.

082 SPEED

The Vessel shall have a minimum service speed in accordance with the threshold service speed in Table 081-1. This service speed shall be attained with the goal of no greater than 85% MCR with Tier 4 certified quad 1450 bhp MAN D2862LE489 engines in the Trial Condition described in Section 841.1. The threshold speed provided is a minimum required to service all routes.

The Vessel shall have a minimum slow cruise speed of not less than 10 knots while exhibiting the low wake wash requirement described in Section 065.

083 APPEARANCE

The Vessel shall be simple yet aesthetically pleasing. An exterior, superstructure scheme shall include, but not be limited to, lightweight decals comprising OWNER's branding in primary color stripes and SF Bay Ferries logos, a sample of which is supplied in Appendix B. The final lines of the superstructure shall be subject to the detailed engineering and design process to ensure the OWNER's preferences are incorporated into the aesthetic of the vessel.

084 PAYLOAD/CAPACITIES

The Vessel shall have both interior and exterior seating capacities in accordance with Table 081-1. In addition to the standard passenger seating, the vessel shall have the following provisions:

- Three (3) or more designated interior wheelchair spaces.
- Two (2) or more uncovered exterior wheelchair spaces near companion seating.
- Two (2) or more designated interior crew station seats with tables.

085 CREW

The vessel shall be certified to operate with no more than four (4) crew:

- One (1) licensed Master.
- One (1) high-speed qualified deckhand.
- Two (2) deckhands.

A USCG approved vessel arrangement that allows for a reduction in required crew is desirable. The final layout and arrangement with be discussed and approved by the owner during the engineering and design phase.

086 SEAKEEPING & MANEUVERING

The Vessel shall exhibit excellent motions to maximize passenger comfort while operating within the prescribed route. The vessel shall be free from undesirable motions and characteristics such as porpoising, bow diving, bow steering, lateral instability or excessive vertical accelerations. The vessel shall also be designed to minimize wet deck slamming when operating in the environmental conditions described in Section 070.

The Vessel maneuverability characteristics shall allow for rapid, safe and controlled docking in all weather and current conditions. The Vessel must be able to walk in calm weather without the bow falling off and pivot turn against strong winds.

087 MAINTAINABILITY

The CONTR shall develop a comprehensive Preventative Maintenance program to include all Vessel equipment and systems which will enable the OWNER's staff to handle the routine maintenance of the Vessel. The Preventative Maintenance program shall be provided in a searchable, electronic format and address not only the OEM equipment, but most importantly the operational considerations of the custom system installations that are unique to this Vessel.

The CONTR shall ensure all daily service and inspection items such as dipsticks, valves, sight gauges, etc. are provided with clear and unobstructed access.

All equipment and machinery shall be mounted so that it is accessible for all necessary maintenance and inspection and so that components are removable for replacement with a minimum amount of interference. This includes keeping the overhead, tight side of engines and other maintenance intensive areas in way of equipment free of pipe or cable runs and installation of lifting padeyes and rails for machinery removal. All soft patch hatches for machinery removal shall be designated and maintained as "Interference Free Zones." The transit path for machinery to and from these hatches shall also remain interference free. Special attention shall be paid to providing the most economical and efficient means possible to remove equipment.

The CONTR shall make every effort to ensure the main engines are located for the best possible maintenance access. As will be mentioned several times throughout these specifications, the CONTR shall design and install the structure, propulsion drive train, electrical wireways, electrical equipment, piping and insulation such that the maximum possible clearance is achieved for maintenance and access to the propulsion engines.

The CONTR shall provide OWNER a proposed main propulsion unit, generator, reduction gear and SCR removal route depiction on the drawings. The Vessel shall be configured to allow the complete removal and replacement of a propulsion engine, gear or generator within a forty-eight (48) hour period. All equipment removal plans shall provide for equipment removal while Vessel is waterborne. A watertight, fume-tight, soft patch shall be installed over the main engines for this purpose. Hatch shall be sized for engine transit. Soft patches shall be equivalent in construction, layout, materials, and functionality to the main engine removal hatches installed on OWNER vessels.

All access shall be through bolted access plates, hatches or similar opening. CONTR shall ensure minimum clearances factored in for maintenance and repair of all equipment as per OEM recommendations with minimal intrusion into passenger spaces.

088 NOISE AND VIBRATION

Noise and vibration criteria apply to calm water operation of the Vessel in Trial Condition from light load through full load with the propulsion prime movers operating through all power levels (minimum to maximum), with concurrent operation of one generator and normally operating support systems (such as heating and ventilation).

Prior to start of construction, the CONTR shall submit to the OWNER a noise and vibration analysis, or as-built noise and vibration report from the parent vessel. The analysis or parent design shall clearly state the noise mitigating treatments that will be used and the predicted noise and vibration levels for each compartment listed in the tables below. The noise data shall provide the A-weighted noise level, where the microphone was located, and ship/equipment operating conditions.

A third-party firm or firms specializing in marine acoustics, vibration analysis and sound measurements aboard marine vessels shall be employed during builder’s trials to take measurements in all areas defined by the criteria below. The selected firm shall utilize measurement and reporting requirements from ISO 2923-1996 Acoustics - Measurement of noise onboard vessels. They shall furnish a final report with all measured raw data, averaging calculations, final reportable results and recommendations for each area measured. This final report shall be made available in duplicate to the OWNER.

The CONTR shall be responsible to locate and correct unsatisfactory vibration or noise conditions arising during tests and/or trials, or subsequently during the warranty period.

NOISE CRITERIA

Acoustic insulation shall be installed as required to meet the noise criteria. CONTR shall not exceed the following sound pressure level standards in the proposed locations*

NOISE LEVEL[1]		dB (A) [4]	
DECK	ZONE	REQUIREMENT	PREFERENCE[3]
PILOTHOUSE	Pilothouse	65	55
2ND DECK	Forward interior	72	60
	Aft interior	72	60
	Aft exterior[2]	80	70
MAIN DECK	Forward interior	70	60
	Aft interior	75	65
	Aft exterior[2]	85	75
*CONTR shall provide a location drawing to be reviewed and approved to the OWNER during the design and engineering phase.			

NOTES:

1. Underway conditions – at all throttle settings, from idle to max RPM, one SSDG online, full HVAC at normal settings, engine room supply/exhaust fans on dockside conditions – main engines at idle, one SSDG online, full HVAC at normal settings, engine room supply/exhaust fans on.
2. Aft Exterior dB (A) readings – taken in areas where apparent wind is less than 10 kts.
3. Optimal levels as defined by the ABS COMF+ standard.
4. These values shall be an average of multiple meter readings in each of the spaces (with the microphone no closer than 1 m to a hard surface).

Sound-damping coatings to jet spaces and resiliently mounting machinery and piping have proven effective at reducing sound. The major improvement comes from soft mounting the deckhouse above the hulls.

VIBRATION CRITERIA

Engine alignments shall be performed in accordance with propulsion equipment manufacturer's tolerances at initial installation and afloat prior to Builder's Trials. CONTR shall perform alignment, with written acceptance from propulsion equipment manufacturer's representative. The final alignment report with all alignment data including the CONTR's and DPSI's signatures shall be provided to the OWNER to be used as the baseline alignment configuration for future dry docking and maintenance activities. The final list of vibration data points will be developed in the detailed engineering and design phase. The list shall include but is not limited to the following in all three axis, engine front, engine rear, gearbox mounts, gearbox output, waterjet input, transom/jet structure in 3 locations.

Flexible couplings shall be capable of accommodating misalignment and isolating vibration in all directions (radial, axial and angular). Couplings shall be dynamically balanced to avoid any additional vibration due to rotational imbalance.

CONTR shall not exceed the following overall frequency weighted RMS value standards:

Vibration Limits in mm/sec peak for single frequency components (1 Hz bandwidth) between 5 and 100 Hz		
	U/W @ 10 kts	U/W @ Service Speed
Interior Passenger Spaces	1.5	2.5
Exterior Decks	1.5	3.0

Vibration Limits in mm/sec^2 peak for single frequency components (1 Hz bandwidth) between 2 and 5 Hz bandwidth) between 2 and 5 Hz		
	U/W @ 10 kts	U/W @ Service Speed
Interior Passenger Spaces	75	100
Exterior Decks	75	100

Under all service conditions, the entire propulsion system shall be free of harmful vibrations throughout the entire operating range. Harmful vibration is defined as vibration capable of damaging primary or connected ancillary equipment and as specified by the equipment manufacturers. In addition, the CONTR shall enlist a third-party firm to measure and report vibration utilizing ISO 20283-2:2008 Code for the measurement and reporting of shipboard vibration data.

Harmful vibrations in any part of the system shall be corrected by the CONTR at no cost to the OWNER. A complete and thorough torsional vibration analysis of the main propulsion drive line (to include main engines, main engine mounts, shafting, couplings, gear box, propulsor unit, etc.) and auxiliaries shall be provided by the CONTR, for review by the OWNER.

089 EMISSIONS

It is intended that the main propulsion engine exhaust emissions shall meet the US EPA Tier 4 standards and be certified as such.

090 VESSEL REGULATORY REQUIREMENTS

The vessel shall be designed and constructed in accordance with the regulatory requirements summarized in Sections 091 through 092 and invoked throughout this specification. This specification also contains additional requirements that augment and/or exceed those of the regulatory agencies. In no case shall the requirements of this Technical Specification supersede or compromise the regulatory requirements.

091 REGULATORY

The Vessel shall be designed and built to class rules, but not classed. The vessel shall be inspected and certificated by the United States Coast Guard (USCG) according to 46 CFR, subchapter K, small passenger vessels (less than 100 gross regulatory tons). The vessel shall meet all regulatory requirements to attain at lakes, bays, and sounds route upon the waters of San Francisco Bay.

The CONTR shall obtain and furnish all certificates, licenses, documents and letters of compliance as may be required and/or issued by the USCG, and other regulatory bodies as required for this class of vessel, route and service.

All certificates and letters of compliance required and/or issued by the regulatory bodies that are required to be displayed shall be mounted on the Vessel behind framed clear Plexiglas at locations consistent with such requirements or, if no such requirements are stated, at locations specified by the OWNER.

For any and all cases in which applicable regulatory language states or implies that the OWNER shall provide or perform a task, it shall be understood that, as part of this contract, such items and tasks shall be provided/performed by the CONTR on behalf of OWNER.

The USCG requirements invoked have precedence over other regulatory requirements, and this Technical Specification, where conflict exists. Where rule interpretations vary between USCG districts, the CONTR shall ensure that the Vessel certificates shall be valid in San Francisco Bay.

Other regulatory requirements invoked in this specification are as follows:

- Rules of the applicable Classification Society (ABS, Lloyd's or DNV-GL).
- Federal Communications Commission (FCC) Rules for Radio Transmitters.
- Institute of Electrical and Electronic Engineers (IEEE) Publication No. 45.
- Occupational Safety and Health Administration (OSHA).
- U.S. Environmental Protection Agency (EPA), the California Air Resources Board (CARB).
- U.S. Public Health Service (USPHS).
- County health regulations applicable to San Francisco and Alameda Counties.
- Americans with Disabilities Act (ADA) Passenger Vessel Accessibility Guidelines and Supplementary Information. Americans with Disabilities Act (ADA) PL101-336 as further described in Section 092.

092 ACCOMMODATIONS FOR PASSENGERS WITH DISABILITIES

The CONTR shall make all accommodations and design the vessel to be in compliance with the requirements of the agreement section on accessibly of vessels for person with disabilities. The goal of this section is to ensure the vessel is 100% complaint with ADA regulations as outlined in the agreement, part C of this RFP.

100 STRUCTURE

The CONTR shall supply all necessary labor, material, skills, and equipment required to complete and test the construction of the vessel.

Anything inadvertently omitted from the plans and specifications deemed necessary and usual to a complete vessel, shall be supplied as a part of this Contract. Materials used and the workmanship thereon shall be of the best description and quality throughout and of adequate sizes to accomplish the purpose intended. The work, in every respect, shall be made under the supervision and to the complete satisfaction of the OWNER and its Representatives in accordance with good marine practice. Defects appearing at any stage of the work shall be cause for rejection even though the piece in question may have previously been passed as satisfactory.

101 STRUCTURAL MATERIALS

Section 830 of this specification contains the principal requirements for materials used in construction of the vessel. Aluminum alloys used in the Vessel shall be as per Table 101-1 unless otherwise noted.

Table 101-1 Structural Aluminum Material Schedule

Component(s)	Material(s)
Plate ≥ ⅛”	ASTM B928 5083, 5086, 5456-H116 or H321
Plate < ⅛”	ASTM B928 5083, 5086, 5456-H116 or H321, or 5052 of SAE AMS-QQ-A-250/8
Extrusions	ASTM B221 6061-T6, 6082-T6, 5086, 5083, 5456-H111 or H112

***Alternate hull construction materials shall be subject to the “or equal” process as outlined in section 830.**

Non-structural items of trim and outfit such as window and doorframes, castings, and hardware items may be alloy 6063 or alloy 6061 of ASTM B221 or alloy 356.1, 356.2 or A356.2 of ASTM B179. Alloy 6061-T6 of ASTM B241 may be used for pipes as structural components. If so used, allowable stresses shall be based on the zero-temper condition.

Brasses and bronzes shall be mixtures of virgin material of proper proportion for the purpose intended and shall be clean, smooth castings, uniform in texture and finish. Galvanizing shall be done by the "hot dip" process. Electro-galvanizing will not be accepted. Unwelded fasteners, pipe, tube, sheet metal, or plates and shapes of stainless steel will be grade 316. Where stainless steel is welded, grade 316L will be used unless otherwise specified. In areas of extreme corrosion, the use of duplex stainless steel grade SAF 2205 or SAF 2507 shall be used. If the CONTR proposes the use of any specialty materials (Inconel, Duplex stainless steel, Titanium, etc.) they shall obtain approval in writing from the OWNER for the application and welding procedures.

102 WELDING AND FITTING

All welding shall conform to the requirements of the USCG, the selected classification society, and the special requirements of this specification. In addition, all welding shall be performed by USCG certified aluminum welders with current certification. Welder qualification certificates shall be provided to the OWNER prior to a welder performing welding on the Vessel.

Special attention shall be provided to joint design and welding procedures in high stress areas in recognition of the high life cycle service which this Vessel will experience.

All lap welds and fillet welds shall be continuous with ends wrapped around snipes, edges, limber holes, etc. All crater cracks shall be repaired in process.

Intermittent welding is permitted where, and only where, allowed by USCG and classification society rules. Special attention shall be paid to the length of both the weld and the interval, and the uniformity of the weld.

The CONTR shall submit a plan for the non-destructive testing of structural welds. The plan shall designate the inspection plan, the acceptance criteria, and the resolution plan in the event that defective welds are discovered. The CONTR shall provide the plan to the OWNER for review at least thirty (30) days prior to start of welding.

The CONTR shall provide a written welding procedure for the isolation and protection of sensitive equipment when welding occurs onboard.

111 HULL STRUCTURE

All hull structure shall meet USCG requirements and conform to the classification society rules of the CONTR's choice as listed below. The Vessel will not be classed.

American Bureau of Shipping (ABS) or Lloyds's Register (LR) or Det Norske Veritas – Germanischer Lloyd (DNV-GL) rules may be used for structural design and construction. Combinations of regulatory rules from separate classification societies is not acceptable; the vessel hull structure shall be designed to one set of rules in their entirety, and the design shall be approved by the USCG.

All overboard discharges and local structural reinforcement shall be constructed using insert plates in accordance with WETA's standard detailing provided in Appendix B. Doubler plates will not be allowed unless specifically approved by the OWNER.

All shell plating in way of the propulsors shall be suitably thick to effectively dampen structure-borne vibrations. Alternate mass damping solutions may be applied, or thinner materials used subject to sufficient engineering analysis and OWNER approval.

A high level of structural detailing shall be used throughout the Vessel. Structural connections shall be integrated into the framing design wherever possible to avoid brackets. Lap jointed brackets and stiffeners shall not be used unless required by class or approved by the OWNER. Stiffener end terminations shall be softened and/or well integrated.

The rub rail shall be robust and designed for the high number of daily landings associated with the intended route. The CONTR shall familiarize themselves with the materials, condition and layout of the fendering at the OWNER's piers when analyzing the rub rail. Attention shall be given to the rub rail design to minimize structural integration and facilitate the future replacement of damaged sections.

All framing shall provide for proper limbering in all sections to allow the flow of water to the appropriate bilge suction lines. All limbering holes shall be large enough to not be clogged by small bilge debris. This aspect shall be reviewed and approved during the detailed engineering and design phase.

All structure IWO of the propulsion engines shall be designed to provide the best possible access for maintenance. As an example, the frames under the engines shall be as low as possible to allow the best clearance for dropping the oil pan in place. The side framing IWO of the tight sides of the engines shall be minimized as best possible to provide the best clearance possible. As an example, suppose a standard side frame is 150mm deep with cutouts for 50mm side longs and the designer can lower that side frame to 100mm deep without cutouts and other scantling changes. These types of frame modifications should be done for better maintenance access. All such structural considerations for maintenance access shall not compromise the structural design of the vessel or the standards to which the other elements in the vessel are designed to.

126 TANKS

The CONTR shall provide tankage in accordance with Table 126-1.

Table 126-1 – Vessel Tankage

QTY	Service	Capacity
2	Fuel Oil Storage	Total capacity per Table 081-1, 1000 USG @ 90% per side minimum
2	Urea Tanks	Sufficient to fill Every 2 days, 100 USG minimum per side
1	Potable and Fresh Water Storage	500 gallons
1	Sewage Holding	500 gallons
1	Electric Hot Water Heating Tank	10 gallons total capacity
2	Engine Room Lubricating Oil Storage Tank	One 30-gallon tank in each engine room

All tanks shall meet USCG and the selected classification society's structural requirements. Potable water, fresh water, and sewage tanks and associated systems shall comply with United States Public Health Service (USPHS) requirements. All tanks under pressure shall comply with the ASME Boiler Code.

Potable water and sewage tanks shall be coated with an approved coating system applicable to the fluid being stored. This is assuming the tanks are made from aluminum. Coating system shall be designed for the 25 year life of the vessel.

Lube oil tanks in the engine rooms shall be centrally located such that it is convenient located for both engines. The lube oil tanks shall have integrated into the design a drip tray and coaming for storing the oil fill container, funnel and oil absorbent pads. See picture below of example from another vessel.

All tanks shall be independent of the hull shell and shall have sufficient space between the tank and shell structure for inspection and maintenance of the shell and the tanks. All tanks shall be supported on foundations to support the tanks under all load conditions. All tanks shall have bolted access openings for cleaning, maintenance and repair.

If the CONTR is going to propose plastic tanks in any locations they CONTR must ensure the fire load in that space meets USCG requires for fire load in a void space without SFP.

Tanks shall have Fills, Vents and Sounding provisions in accordance with Section 506.

151 SUPERSTRUCTURE

The enclosed passenger deck areas shall be constructed from a USCG approved material subject to section 101 and well insulated from exterior weather, noise, and odors of the machinery plant. Final arrangement and details to be determined in the detailed design engine engineering phase.

163 SEACHEST

The CONTR shall design independent sea chests that are suitable sized for maintenance, repair and coating of the sea chest and the connecting pipes. The final arrangement of the sea chests shall be determined in the detailed engineering and design phase. The Contractor may propose to group certain items into a common sea chest as long as their design criteria are compatible. As an example, the main engines typically have pressurized sea chests were the generators do not. Items like fire pumps and bilge can accommodate either. At a minimum the main engines shall be on separate sea chests to ensure operation redundancy.

The sea chests shall be fitted with large zinc anodes for cathodic protection. The anodes shall be ZHC-42 or equivalent. The anodes shall be mounted as per the requirements of the cathodic protection section of these specifications.

The sea chests shall be designed such that there are no pockets that can accumulate marine growth and debris. They shall also be designed such that coating and repair of the coating systems can be completed easily by average level shipyard workers skill level.

The sea chests shall be designed and fabricated with valved vent lines that terminate above the main deck. The vent valves shall be flanged, no direct threaded fittings in the sea chests shall be allowed.

167 HULL DOORS, HATCHES AND MANHOLES

Weathertight doors shall be aluminum quick acting. Exterior joiner doors shall be gasketed, of hollow aluminum construction, thermal insulated, meeting USCG requirements for structural fire protection where applicable. Exterior doors into the passenger cabin shall be of sturdy construction, as manufactured by PACIFIC COAST MARINE INC. brand preferably of the hinged type. Following Sea Trials and prior to Delivery, all doors shall be tested for proper closure and tightness and deficiencies shall be corrected. The OWNER shall approve the door schedule prior to ordering any doors.

Engine room doors shall be powder-coated stainless steel with stainless fasteners and locksets. Doors and hatches in passenger areas shall meet the ADA requirements of Section 092 and incorporate fairings or be installed flush to eliminate all tripping hazards. All doors shall have closers and hold open latches, using marine grade materials.

Provide secondary means of escape from all machinery and other compartments as required by USCG. The hatches shall be hinged and manufactured by FREEMAN MARINE EQUIPMENT. Minimum deck hatch shall be oval 19”x26” at a minimum but 24” square should be used were they fit. The final arrangement, ingress and egress details shall be reviewed and approved in the detailed engineering and design phase. Where possible hand holds shall be provided to ease ingress and egress from deck hatches.

Manholes into void spaces and emergency escapes shall be raised above the finished deck in accordance with WETA’s standard details shown in Appendix B to prevent water from puddling. They shall be watertight, aluminum, standard positive locking type as manufactured by FREEMAN MARINE EQUIPMENT with the A-K style coaming.

Doors and hatches that are required to be closed at sea shall be so marked.

Hatches shall meet structural fire protection regulatory requirements.

171 MASTS

A main mast shall be installed as required for proper positioning of antennas and navigation lights. Platforms for antennas and lights shall be installed as required. Ladder rungs shall be fitted as required for access to perform maintenance, repairs and inspections on the mast.

200 MACHINERY - PROPULSION AND SHIP SERVICE

Main propulsion power for the Vessel shall be provided by waterjet propulsion units, each driven by a diesel engine burning No. 2 ultra-low sulfur diesel oil or R-99 as approved by the OEM, through a marine reduction gear. The main propulsion diesels and waterjet propulsion units shall be of sufficient power and thrust to achieve the specified Service Speed, see Section 081 of the Technical Specifications.

The OWNER acknowledges the available options for propulsion diesel engines are limited while the marine industry completes the transition from Tier 3 to Tier 4 emissions standards. The CONTR shall provide the following Propulsion Engines:

- Tier 4 certified quad 1450 bhp MAN D2862LE489 engines

  *** Alternate engines shall be subject to the "or equal'' process as outlined in section 830**

All propulsion machinery, equipment, components, and support systems shall be new and unused. Machinery and equipment shall be manufactured by recognized manufacturers of marine propulsion equipment and systems, having the capabilities to provide service and supply parts in the San Francisco Bay Area. MAN meets these requirements.

All machinery shall be mounted so that it is accessible for maintenance and that components are removable for replacement with a minimum amount of interference. This includes keeping the overhead in way of main engines free of pipe or cable runs and installation of lifting padeyes and rails for machinery removal. All soft patch hatches for machinery removal shall be designated and maintained as interference-free zones. The transit path for machinery to and from these hatches shall also remain interference free, to the greatest extent possible. A flush, watertight, fume tight, soft patch shall be installed over the main engines, reduction gears, and generators. The soft patches will be designed for transit of the machinery in the same orientation as the machinery operates.

The CONTR shall 3D model the entire engine and jet rooms. This shall include but is not limited to all major machinery, shafting, equipment, piping, electrical wire ways, panels and any other items that will impact the operability and maintainability of the propulsion equipment. The CONTR will develop with 3D model with the OWNER and their representatives during the detailed engineering and design phase. In general, all items will be limited in their installation alongside the engines to maximize the maintainability of the main engines and gear boxes. The 3D model shall account for removal distances for all major engine, gear and waterjet components. This shall include but is not limited to harmonic balancer, high pressure fuel pump, heat exchanger, heads, liners, pistons, turbos, intercoolers, couplings, gear inspection hatches, gear components that are serviceable in place, shafts, seals, hydraulic pumps, thrust bearings, cylinders and inspections ports with raised coamings as required by the DWL. This list is to give the CONTR an idea of the items, the final list will be reviewed and approved in the detailed engineering and design phase of the project. In general, the heavier the components the better the access needs to be.

The CONTR shall design the machinery spaces with lifting eyes located where they need to be for rigging equipment for repair and maintenance. The final placement and number of rigging points shall be determined in the detailed engineering and design phase. All lifting points will be permanently labeled with their safe working load. All rigging points shall be outside of the SFP so that it does not get disturbed in the rigging process. Where lifting points may be a hazard to operating and maintenance personnel they may be provided as bolt in to remove head knocking hazards as an example.

Both Engine Rooms shall be configured for unmanned operation with remote control of all propulsion functions located in the Pilothouse. Local operating panels shall be provided in each Engine Room.

Under all service conditions, the entire propulsion system shall be free of harmful vibrations throughout the entire operating range. Harmful vibration is defined as vibration capable of damaging primary or connected ancillary equipment and as specified by the equipment manufacturers. Harmful vibrations in any part of the system shall be corrected by the CONTR. A complete and thorough torsional vibration analysis of the main propulsion drive line (to include main engines, main engine mounts, shafting, couplings, gears, waterjet unit, etc.) shall be provided by the CONTR for review by the OWNER, thirty (30) days prior to installation of main engines and shafting.

The main engine, reduction gear, waterjet, and generator set vendors shall submit a comprehensive preventive maintenance program outline which will enable the OWNER to conduct routine maintenance of the machinery and equipment provided.

205 PROPULSION SYSTEM INTEGRATION

The CONTR shall employ the services of a Designated Propulsion Systems Integrator (DPSI) to provide a complete propulsion system for the Vessel including all design, engineering, calculation, analyses, machinery, equipment, hardware, inspections, tests, and trials. The DPSI shall have specific experience with marine waterjet propulsion units installed in high speed ferries. A qualified and experienced DPSI is desired in order to maintain, to the maximum extent possible, a source of responsibility for design, supply, warranty, and support for the majority of propulsion system machinery and components.

The CONTR and DPSI shall take responsibility for the supply of the propulsion system machinery, including the diesel engine, reduction gear, high speed and low speed couplings and shafting, including torsional and flexible types, spool spacers, resilient mounts, and flexible connections such as exhaust bellows and seawater bellows. The CONTR and the DPSI shall also take responsibility for the integration the desired “Full Power Mode” functionality addressed in Section 438. The system shall normally run at 85% of full load (reduced RPM) unless “Full Power Mode” is engaged in which case the propulsion system shall operate at 100% load (full RPM). The DPSI shall be responsible for all main engine and gearbox alarm and monitoring as per Section 438.

It is preferred that a single supplier be used for the torsional/misalignment coupling, and all shafting.

The CONTR is responsible to ensure that the correct size, rating, model, and type of propulsion machinery is selected and installed. The CONTR and the DPSI are responsible to ensure all propulsion machinery is fully integrated into a complete propulsion system package and performs to the requirements of the RFP.

The CONTR, the DPSI, and the Original Equipment Manufacturers (OEM)s for waterjets and reduction gears shall carefully determine and verify to the OWNER that the main engine, the reduction gear, and the waterjet all rotate in the correct direction to provide main propulsion as designed.

233 DIESEL ENGINES

CONTR shall provide the OWNER with a complete scope of supply for main propulsion engines, ready for installation and operation.

The CONTR shall provide, install, test, commission, and warranty the marine propulsion engines. These engines shall be heavy duty marine diesel engines in regular production. The engines are to be certified to meet EPA Tier 4 emissions criteria as described in Section 089.

The engines shall utilize selective catalytic reduction (SCR) for compliance with EPA Tier 4. The SCRs, complete with urea dosing systems and controls, shall be provided by the engine manufacturer. The propulsion engines shall support the control, alarm, and monitoring requirements of Section 438 of the Technical Specifications.

The engine mounting system design is to include optimized engine resilient mounts to reduce structure-born noise. The resilient mounts shall be provided by the engine manufacturer, of standard production release, supported by the engine manufacturer spare parts program and covered by the engine manufacturer's standard warranties. A solid body dynamic analysis of the engine on the proposed engine mounts and the resultant predicted displacements, shall be provided.

The engine and its exhaust components shall meet all regulatory surface temperature requirements; and shall be insulated and lagged where necessary to prevent injury to personnel.

The engines shall be heat exchanger cooled, each with a plate type heat exchanger integral to the engine. Main engine aftercoolers, if provided, shall be separate circuit fresh water cooled. Engine scope of supply will include USCG- approved, flanged, raw water flex joints. The main engine coolant header tanks shall have sight gauges and alarms installed to verify coolant level without opening the header tanks, and to warn of low coolant levels. Header tank shall be integral to or attached to the engine.

The engine manufacturer shall provide a fuel treatment and filtration system for each main engine. Main engines and generators shall have separate systems that shall provide treated fuel to each engine, in accordance with Section 261 of the Technical Specifications. The filtration system provided by the DPSI shall be reviewed and approved by the OWNER. The system shall be warranted by the DPSI as meeting or exceeding all of the factory requirements for fuel cleanliness as required by the factory warranty.

All enhancement systems shall be standard factory installed, supported, and warranted systems. All propulsion engine automation, control electronics and monitoring for such systems shall be supplied by the propulsion system manufacturer and integrated into their systems.

The CONTR shall provide a shelf with spill coaming in each Engine Room to hold a five (5) gallon bucket of makeup engine coolant.

233 REDUCTION GEARS

The CONTR shall provide and install a reversing, single speed, marine reduction gear for each propulsion engine. The reduction gear ratio shall be selected through careful and thorough examination of the thrust curves by the CONTR's engineering team and the waterjet manufacturer.

The reduction gear boxes shall be rated at the engine's maximum continuous rating at no more than 75% of the gearboxes rating in a medium duty application. As an example, of the engine were to put out 75bhp the gearbox would be rated for a minimum of 100bhp at rated RPM in a medium duty application. The reduction gear shall be alarmed and monitored in accordance with gear manufacturer's requirements and guidance, and as per Section 438 of the Technical Specifications. The reduction gear boxes shall use the same lubrication oil as the main engines, with written approval from the gear manufacturer.

The gearbox shall be resiliently mounted to its foundation and located and positioned such that there is good access on all sides of the unit for maintenance, inspections, and repair. Replacement of clutch packs and control valves, input/output couplings, input/output shaft seals, oil coolers, and lubrication oil pumps shall not require removal of the unit or removal of soft patches. The CONTR is to make sure all major maintenance and inspections, short of total rebuild, shall be able to be accomplished in place with sufficient access.

Reduction gear oil seawater cooling circuits shall utilize duplex stainless-steel orifice controls to provide optimum operating temperatures for the gear. Details of the temperature control system shall be subject to OWNER review and approval. The piping shall be designed for the calculated low flow rate required for gearbox cooling. The orifice

plate shall be used to make minor flow corrections to obtain optimum gearbox temperature. In WETA's other vessels this is a very low flow rate.

241 PROPULSION COUPLINGS

The CONTR shall provide all propulsion shaft line and machinery couplings as required.

The torsional couplings shall be provided by the DPSI with approval from the OWNER after review of the Torsional Vibration Analysis. The coupling manufacturer shall be a common place item in normal production, Centa, Vulcan, Geislinger or other.

The CONTR is responsible to ensure the following:

- The torsional couplings shall be operated within application limits of each coupling, under single cylinder misfire conditions.
- The torsional couplings shall be designed such that the elements may be replaced without disturbing the mounting position of the engine or reduction gear.
- The torsional couplings shall be designed for the maximum ambient Engine Room temperature.
- The overall design parameters shall include optimized engine resilient mounts and torsional coupling elements to provide for reduced structure born noise.
- The resilient mounts and torsional couplings shall be a designed system specified by the DPSI, of standard production release, supported by a spare parts system and covered by standard warranties.

Flexible couplings shall be capable of accommodating misalignment and isolating vibration in all directions (radial, axial, and angular) for the full range of shaft speed and motion. Couplings shall be dynamically balanced.

243 SHAFTING

The CONTR shall provide design, supply, installation, testing, commissioning, and warranty support for the propulsion shafting system. The shafting scope of supply is to include, but not be limited to, high speed and low speed composite shafting, machinery housings, hubs, adaptor plates, and spool spacers (as required), and all fasteners. The shafting shall be Geislinger or Centa.

SHAFTING DESIGN & ENGINEERING

The shafting system, complete with all components, shall be a designed system provided by the CONTR by way of the DPSI. It shall incorporate equipment of standard production release, supported by the shafting manufacturer spare parts system, and covered by standard warranties. The entire propulsion shafting system, all components and equipment included, shall be designed to meet ABS HSC standards, however ABS classification is not required.

The CONTR shall coordinate and order a torsional vibration analysis (TVA) to be conducted by the main engine manufacturer of the entire propulsion system, based on the proposed design. The complete shafting system including all components shall not be ordered until the TVA result is produced and accepted by all respective manufacturers. Letters from all the respective firms shall be submitted indicating their review of the TVA and acceptance of the vibratory forces predicted in their respective equipment.

The propulsion shafting system design, torsional characteristics, and calculations shall be approved, in writing, by the CONTR. Calculations shall be provided to the OWNER for review. The calculations shall reference the

respective ABS class requirements and show how the calculations meet those requirements. The requirement of the OWNER is to have the CONTR responsible for the final shafting system vibratory and torsional characteristics. The design of the shafting system shall incorporate all misalignment and torsion couplings required for a system free of harmful vibration. All couplings and seals shall provide for the range of motion allowed by the resiliently mounted engines and reduction gears. The installed rotating shafting system shall be free from damaging vibrations in all modes of operation.

An engineering summary, including data from the solid body dynamic analysis (see Section 233) and other assumptions, calculations and OEM limits shall be developed. This summary shall indicate that the overhung weights and dynamic reaction forces exhibited on the engine output flange, reduction gear input shaft, reduction gear output shaft and water jet input shaft, are within the OEM published limits. This engineering summary shall be submitted to the OWNER for review.

A whirling study shall also be conducted and provided to the OWNER for review.

The design shall include two dimensional (2D) AutoCAD® drawings, installation instructions, torque values for all fasteners and alignment tolerances and limits.

The shafting system installation drawing shall be approved by USCG and the OWNER. The CONTR shall work with the DPSI to provide the best possible access to the tight side of the engines by way of shafting offsets. The tight side of the engines is defined as the outboard side of the outboard engine and the inboard side of the inboard engine. The shafting system shall utilize Z or W configurations of cardan shafts, or similar offsets of composite shafting systems to provide the best possible clearance for maintenance. The main engines and gears do not need to be installed parallel to centerline. However, the waterjets shall be unless specific written approved is granted by the OWNER and the Hamilton Jet.

All metal parts of the shafting system shall be painted to match the engine to prevent corrosion. Provide a removable drive line spool shaft in the Jet Room aft of the reduction gear for removal and servicing the shaft seal assembly.

SHAFTING ALIGNMENT

Preliminary propulsion train alignments shall occur prior to Vessel launch. Final alignment shall be conducted after vessel launch once the vessel's structure has reached floating equilibrium. Care shall be taken to properly account for the daily heating and cooling of Vessel structure. An alignment report will be provided by the CONTR, indicating actual alignment measurements of the complete propulsion system and indicate compliance with all OEM requirements. The report shall show all alignment measurements and their limits and signed by the CONTR and the DPSI as meeting all warranty requirements. No alignment measurements shall be delivered at their maximum limits, no more than 75% of the limit may be used. The CONTR shall be responsible for the performance and documentation of all shafting alignments. The final shaft and engine alignments shall be witnessed by the OWNER. A copy of this inspection procedure shall be agreed to and signed by the OEMs for the main engine, shafting and coupling manufacturer, the reduction gear, and the waterjet.

All propulsion shafting shall be easily removable, to allow for maintenance and repair of the reduction gear boxes, seals, couplings, and waterjets.

The CONTR is responsible to design and install removable guards over exposed shafting, shaft couplings, and all rotating machinery to prevent personnel injury and facilitate maintenance and inspections.

244 SEALS

BULKHEAD SEALS

The CONTR shall provide a bulkhead seal assembly in the Engine Room/Jet Room watertight bulkhead to allow the propulsion shaft to penetrate the boundary. The design and specification of this seal shall be undertaken jointly by the CONTR and the DPSI. The seal shall allow for full range of motion of the shaft. The bulkhead seal shall be designed for robustness and durability, and for ease of maintenance and repair. The bulkhead seal shall allow for simple and straightforward removal of the high-speed shaft or the reduction gear. The bulkhead seal shall maintain the watertight integrity of the bulkhead.

The design of the bulkhead seal shall allow for servicing and removal of the reduction gear input flange and input shaft seal assembly. The design shall not require that the reduction gear come out of frame to perform the maintenance actions.

247 WATERJETS

The CONTR shall provide a complete waterjet installation from HAMILTON Waterjet. The waterjets shall be sized to allow for reliable three engine operation without cavitation. The proposal package shall provide HAMILTON's jet matching analysis showing speed and cavitation margins on three and four engine operation. The waterjets shall be alarmed and monitored in accordance with manufacturer's requirements and guidance, and per Section 438 of the Technical Specifications.

Waterjets shall come with a complete control system as per the 252 section. All systems required for support and operation of the waterjets shall be provided and installed by CONTR. Waterjets shall be continuous duty rated at the engines maximum continuous rating and engine speed.

The waterjet OEM shall take part in all required propulsion train analyses and calculations, and shall sign off on all required calculations, analyses, tests, and inspections. The waterjet OEM shall take part in the selection of the ratio for the reduction gear in order to optimize the overall propulsion efficiency of the Vessel.

INSTALLATION ARRANGEMENTS

The waterjets are to be installed in the designated Jet Rooms inside each hull pontoon, in accordance with manufacturer's installation guidelines. The waterjets are to be located such that there is good access on all sides of the unit sufficient for maintenance and repair. Replacement of seals, belts, and other normal maintenance items shall not require removal of the unit or removal of soft patches. Spare hydraulic drive belts shall be provided and pre-installed on the drive shaft for ready use on a HAMILTON installation. The CONTR shall be responsible to ensure that all waterjet maintenance, short of total rebuild, shall be able to be accomplished in place, and with sufficient access.

If applicable, the intake side of the waterjet tunnel shall include provision for an intake grille, of water jet manufacturer's design, to prevent debris from entering the pump. The grille shall be readily removable and easily installed.

251 COMBUSTION AIR SYSTEM

Engine room ventilation systems shall be provided by Delta T Systems and are capable of supplying 115% of the total engine requirements at 100% power at 85 degrees F. Each engine room shall be equipped with fans to supply ventilation and combustion air to the engine room while maintaining positive engine room pressure under all

conditions. The fans shall be fitted with variable frequency drives (VFDs) for speed modulation depending on engine room temperature. The Delta T System shall be controlled in the pilothouse and the engine room by a Delta T standard touch screens. The temperature sensor shall be placed in the exhaust stream in the engine room. Delta T shall program the VFD's so that the minimum fan speed exceeds combustion air requirements while the engines are running.

The fire damper actuation shall be as per the 555 section. The fire dampers shall be made of corrosion-resistant material, 316 stainless steel or approved equal.

The plenums shall be fitted with Wide Manufacturing, Delta T Systems, or equal, water demisters properly fitted with drains and mounted outboard. The air inlet plenums shall be fitted with internal insulation for noise control.

Fans discharging into machinery spaces shall be arranged so that they do not blow directly on or over any electrical boxes, panels, or equipment.

252 PROPULSION CONTROL SYSTEM

The Vessel's propulsion system controls (controlling engine throttles, reduction gears, and waterjet steering and reverse bucket) shall be provided by the waterjet manufacturer. Install an AVX tiller as reviewed and approved by the OWNER. The CONTR is responsible to ensure installation of a fully integrated propulsion controls system.

The Vessel controls shall consist of identical dual control lever systems at three stations, arranged for independent control configuration (Pilothouse main centerline station, port and starboard bridge wings). Bridge wing stations shall be arranged to optimize visibility to the passenger boarding areas, and line handling locations at the Vessel stern and bow. Waterjet controls for throttle, steering, thrust, clutch, back flush, and alarm panels shall be provided at all three (3) Vessel control locations: at the centerline captain's chair and integrated into the Pilothouse console, and at each bridge wing station. Clutch panels shall include indicator lights to confirm position of clutch. Installations shall be similar to other WETA vessels and subject to OWNER review and approval.

All main engine local control and indication panels shall be located off the engine and shall be resiliently mounted to adjacent structure. Location of local operating panels shall provide for ease of operation and monitoring by operating and maintenance personnel, and locations are subject to OWNER approval.

The speed control and direction control actuators are subject to OWNER approval in all respects.

Remote controls in the Pilothouse shall permit main engines to be started and stopped from the Pilothouse and at bridge wing stations. E-stops shall be provided at all operating stations.

All propulsion controls, normal and back-up, shall include displays. Displays shall be powered from the same source as the control and be dimmable from a single control to the greatest extent feasible. (If the capability exists in the component, it shall be used.)

The main propulsion engine controls shall incorporate control station transfer and lock-out, and engine synchronization.

Instruments in the Pilothouse shall give a complete display of engine, reduction gear, and waterjet performance, with audible and visual alarms of propulsion system faults. See Sections 247 and 438 of the Technical Specifications for descriptions and requirements for propulsion system alarm, monitoring, and control systems.

256 SEAWATER COOLING

The CONTR shall design and provide complete seawater cooling systems to support installed machinery and equipment, as applicable and required. In general, there shall be independent seachests, strainers, and piping systems for each main engine and generator. Certain items may be grouped into a common seachest as per the 163 section. The final details of all piping systems shall be reviewed and approved by the OWNER in the detailed engineering and design phase.

All valves and materials in the seawater systems shall be in accordance with Appendix B. All skin valves shall be easily accessible with visual feedback of the valve orientation. All piping shall be in accordance with the general piping requirements of Section 505.

If a valve is installed with a gear operator and a reach rod the CONTR shall ensure that visual indication of the valve's orientation is quick and easy to identify. As an example, a contrasting colored metallic flag can be affixed to the rotating face of the gear operator that show the orientation of the butterfly valve disc.

All devices requiring seawater shall be self-priming in all modes of operation. During the detailed engineering and design phase the CONTR shall prove to the OWNER that every effort has been made to ensure that all seawater systems are self-priming.

All strainers shall be simplex basket type strainers fabricated from CuNi. All strainer details shall be approved by the OWNER in the engineering phase to ensure the highest quality units are employed.

All seawater pipes shall be analyzed to ensure that the maximum flow velocity is within industry-accepted norms for the piping material. All flanged connections to aluminum structure shall be heavily reinforced to ensure the long-term viability of the through hull. This shall include heavy insert plates and at least four (4) gussets in areas that are not designed for penetrations (seachests). All aluminum pipes in through-hull connections shall be coated in accordance with Section 631.

259 ENGINE EXHAUST

Main propulsion engine exhaust piping shall exit the vessel through the transom or inboard side shell as far aft as possible. Generator set exhaust piping shall be routed inboard and discharge into the tunnel between hulls. The Main Engine exhaust shall be a dry exhaust exiting through a cooling ring at the transom. The CONTR can provide a sea water injection ring into the exhaust stream to cool the gases prior to the overboard if all details are reviewed and approved by the OWNER. Any sea water injection ring (spray head) shall be designed and supplied by Marine Exhaust Systems (MES) or Riviera Beach Florida. The material of the injection ring will be suited to the exhaust gas temperature, either 2205 duplex stainless steel or AL-6XN as approved by the OWNER and MES. All exhaust pipes will terminate well above the waterline, with significant slope provided to avoid water ingestion into the exhaust pipe under any operating conditions or maneuvers. The outlets shall be provided with cowls on the forward side if they are side exit. If required the arrangement shall include a surge pipe to ensure sea water does not get back up into the SCR's.

The CONTR shall carefully consider the flow of exhaust gases during normal operations and at a reasonable range of speed, heading and wind direction and ensure avoidance of:

- Re-introduction of exhaust gases into any ventilation or combustion air intakes.
- Exhaust gases sweeping onto decks normally occupied by passenger or crew.

Arrangement and details of engine exhaust pipe design, routing, and arrangements are of keen interest to the OWNER and shall be subject to review and approval by the OWNER prior to start of construction. The CONTR shall submit calculations, based on installed piping and components, demonstrating the installed systems do not exceed OEM back pressure, displacements, loads, or moments at all expansion joints and exhaust system connections to engines, equipment, and hull penetrations. Provide multi-ply expansion joints (wrinkle bellies) ahead of all structural penetrations. Pay particular attention to avoiding stress to piping, flanges, bellows, SCR's and structural exhaust penetrations. The DPSI and OWNER shall review and approve the exhaust system design for full compliance with all factory warranty requirements.

All outboard engine exhaust tail pipes are to be 316L stainless steel. Schedule 10 exhaust piping with plate flanges are to be installed. Provide duplex stainless steel grade 2205 or AL-6XN for the wet part of the exhaust pipe. The use of these exotic alloys shall require the CONTR to provide for review and approval a weld procedure to ensure CONTR welded exotic alloys are welded properly.

All exhaust flange/ gasket bolts shall be retightened following successful Sea Trials. All exhaust flanges and gaskets shall be MES style captive metallic gaskets.

Install captive vibration isolators to prevent metal to metal contact and provide effective vibration isolation between any part of the exhaust system and the ship structure. At no point shall the dry exhaust systems transfer heat to the aluminum structure such that the temperature exceeds 65.5°C as per USCG requirements.

For main engine exhausts ensure that piping in the way of engine or gear removal is flanged with expansion joints for ease of removal. Flanged sections of exhaust pipe shall be no longer than 6' in length. The system design shall incorporate to the greatest extent possible the future addition of a Diesel Particulate Filter (DPF) when require by CARB. The space reserved for a future DPF shall be determined by the OWNER and the DPSI in the detailed engineering and design phase. The space allocated will be an estimate of smaller packaging based off of product development that has not been mandated. As such the design of the vessel will not be compromised but effort will be expended to plan for the future. **If the EPA Tier 4 certification of the MAN engine package would be invalidated by the addition of a DPF then please state this in the proposal an no further space allocation is required.**

EXPANSION JOINTS

Exhaust expansion joints shall be provided as needed. They shall be multi-ply, stainless steel or Inconel, provided with liners, and shall be designed, constructed, and installed to EJMA standards. Provide DME, INC. expansion joints. All expansion joints are to be provided with one free-turning flange to facilitate installation. Expansion joints shall be installed with factory-provided shipping stays in place. Shipping stays are to be removed following installation ensuring proper fit. The CONTR shall ensure proper support of the exhaust system, demonstrating adequate pipe line support and flexibility. Care shall be taken to ensure proper alignment of exhaust system with equipment and machinery. Exhaust hangers shall be designed to minimize noise transmission to the structure.

EXHAUST INSULATION

Insulate all exhaust piping, flanges, expansion joints, silencers, and SCR in both the Engine Rooms and Jet Rooms, in accordance with the following:

- Engine exhausts shall be lagged with a multi-part system made up of silicon/fiberglass outer cloth (ALPHA MARITEX Style #3259-2-SS) sewn to high temperature eighteen (18) ounce inner cloth (ALPHA SIL Style 600).

- Attached to that shall be a knitted stainless steel wire tubular fabric (ALPHA MARITEX #91160) which is in direct contact with the pipe wall. Or stainless steel spring clips as per WETA vessel M.V. Scorpio.

- Install a 2" temperature mat between the silicon outer cloth and the inner cloth.
- Insulation muffs are to overlap adjacent sections of insulated pipe by a minimum of 3", and lace together with stainless steel hooks and wire. Insulation is to be installed in easily removable sections.
- Insulation blankets shall be pre-sewn and removable at all flanges.

SELECTIVE CATALYTIC REDUCTION (SCR)

An SCR system will be required to meet the exhaust emission requirements of EPA Tier 4. The SCR shall meet the following requirements:

- The SCR shall be provided with factory installed sound suppression and thermal insulation packages.
- Installed so that access is provided for inspection and easy maintenance of components.
- The catalyst units complete for each engine shall be able to be removed and replaced with a spare unit by two (2) persons in four (4) hours dockside.
- The SCR shall be fitted with a thermal blanket that will limit the surface temperature to a maximum of 65.5°C or less to ensure that heat transmission to the space that the SCR is located in does not require additional ventilation. The ventilation exhaust shall be located close to the SCR to minimize temperature in the rest of the compartment.
- SCR housings are to be resiliently mounted and isolated from supporting structure.
- The SCR shall be removable through the Engine Room soft patch while the engine remains in place. If possible, design Engine Room air exhaust plenum for removal or servicing of the SCR unit.

MUFFLER

Based on the sound attenuation characteristics of the MAN SCR the CONTR may need to install a muffler to obtain the Contract required noise limitations. The muffler shall be dry and total isolated thermally from the vessel's structure as per the requirements of this section. The details of the systems mufflers shall be reviewed and approved by the DPSI and the OWNER in the detailed engineering and design phase.

261 FUEL OIL SYSTEM

Each engine will be provided with independent supply and return circuits. The sizing of piping and fittings will be in accordance with equipment manufacturer's requirements. Fuel oil return lines from main engines and generator sets shall be independent of each other all the way back to the tank.

All fuel filters and associated gauges and valves shall be located above the engine room deck plates with drip pans under the fuel filter assemblies. Special care shall be exercised in meeting USCG spray protection requirements for the fuel oil system. No pressurized fuel filters shall be located where they can spray onto dry exhaust piping.

The fuel system shall incorporate duplex fuel filters or a fuel filter/coalescer (treatment) system provided by the DPSI. The use of the manufacturer's fuel treatment system is required and shall be warranted by the DPSI.

The CONTR shall provide each hull with a hand crank fuel priming pump valved into the main fuel supply header for the main engine circuit. The pump shall be a Blackmer PA201A inline sliding vane manual pump permanently mounted and plumbed as needed for proper operation.

All fuel lines shall be routed low in the Vessel to promote flooded suctions and filters to all engines with careful attention paid to venting of entrapped air.

All piping shall be in accordance with the general piping requirements of Section 505. Fuel oil tank high level alarms and level sensing shall be provided in accordance with Appendix B.

262 LUBE OIL SYSTEM

The CONTR shall provide clean/dirty lube oil systems for the shoreside refilling and removal of lube oil. Clean oil will be pumped onto the Vessel via the OWNER's shoreside pump. Dirty lube oil shall be pumped out of the vessel via the OWNER's dirty shore side pump.

The system shall have a single QD in each engine room's access fiddley for connection of the appropriate shoreside oil system in accordance with Section 506. That QD shall be plumbed to a lube oil manifold mounted in the engine room. The manifold shall have a purge port for flushing dirty lube oil out of the piping prior to filling with clean lube oil.

Each main propulsion engine, gear and generator shall be outfitted with a remote lube oil connection. The remote lube oil connection shall consist of an isolation valve directly connected to the oil sump. There shall be a hose connection from the isolation valve to the hard piping to provide vibration isolation for the machinery. The system shall be hard plumbed to the greatest extent possible as per the piping requirements of section 505.

Each engine room shall be equipped with a lube oil station. The lube oil station shall consist of:

The clean lube oil tank shall meet the requirements of Section 126 and be located as high in the engine room as possible to facilitate the gravity-fed supply to the oiling cans.

298 OPERATING FLUIDS

Upon completion of all work defined in this contract, all operational fluids in all equipment will be topped up with manufacturer approved fluids. The Vessel shall be trialed and delivered with all equipment ready to operate according to manufacturers' recommendations.

300 ELECTRICAL SYSTEMS

301 ELECTRICAL LOAD ANALYSIS

An electrical load analysis shall be prepared and maintained throughout the vessel's construction program. This analysis shall be updated whenever actual purchased equipment data becomes available or when major service load changes occur. Each revision shall be updated and submitted to the OWNER.

302 ELECTRICAL MOTORS

Motors shall meet appropriate regulatory, IEEE 45, and USCG criteria. Motors shall be low maintenance, high durability motors. AC motors three-fourths (3/4) horsepower and larger shall be 3 phase, 208 VAC if available for the application. One-half (1/2) horsepower and smaller AC motors may be 120 VAC single phase. All motors shall be suitable for full voltage starting, and shall, at a minimum, meet NEMA standards for the design involved. Motors shall be of the ball-bearing type and shall be designed such that the requirement for periodic lubrication is kept to a minimum. If a motor is to be controlled by a variable frequency drive (VFD), then the motor shall be compatible with the VFD operation in all respects, including having isolated bearings or other shaft-current mitigation technologies. All motors shall be fitted with a corrosion-resistant nameplate which shall include:

- The manufacturer's type and frame design,
- Rated horsepower,
- Type of rating,
- Intended ambient temperature,
- Temperature rise at rated load,
- RPM at rated load,
- Operating voltage,
- Current drain at rated load,
- Number of phases, frequency, and code for locked rotor kva on motors one-half (1/2) horsepower and greater, all in accordance with the national electric code.

303 ELECTRICAL MOTOR CONTROLLERS

All motor controllers shall be equipped with thermal protection devices appropriately sized to support the full running load of the equipment served.

Motor controllers shall be of an industrial type that conforms to the requirements of 46 CFR as well as the UNDERWRITERS LABORATORIES (UL) Standard 508, and they shall bear the appropriate label. Controllers shall also, at a minimum, conform to ABS regulations, IEEE 45 recommendations, and shall meet the requirements of the USCG. Controllers shall be provided from the same manufacturer, SQUARE D or equal. Controllers shall have overload sensors in each ungrounded phase. Controllers having remote start/stop stations shall have control transformers with ungrounded secondary circuits to prevent accidental starting or stopping caused by a single short to ground. All controllers shall have under voltage protection when operating from a remote, automatic two-wire device.

All motor controllers shall indicate: Motor Running; Speed (if applicable); and Direction (if applicable). They shall be fitted with "LOCAL/OFF/AUTO" controls as appropriate with a lock-out mechanism for the "OFF" position. Controls

shall be near the controlled motor, as far as practicable. They shall include a corrosion resistant nameplate with the following information:

- Manufacturer
- Type and Serial Number
- Voltages and Phases
- Current or Horsepower
- Operating Instructions

A plastic laminated wiring diagram of each controller shall be permanently mounted inside the controller cover.

305 NAMEPLATES AND LABELS – ELECTRICAL EQUIPMENT

Nameplates shall be fitted on all circuit breakers, distribution panels, shore receptacles, and connection boxes. Nameplates shall show "fed from" and location on all breaker panels. Amperages of breakers shall also be marked.

Plastic laminated circuit directory cards 8-1/2" by 11" (maximum) and one-line diagrams shall be provided inside panel boxes and switchboards to identify the equipment and service supplied from each circuit including breaker amperage.

All nameplates shall be adhered to the equipment with a permanent marine adhesive, 3M 5200 or approved equal.

311 ELECTRICAL SYSTEMS - GENERATING

The Vessel shall be equipped with two Pacific Power Group, model MG115, John Deere 4045AFM85 diesel powered generator sets, rated at 99 kWe, 123kVA , 0.8 PF, 208 V , 60Hz, 3 phase, with 110% load Capability . Generator sets has be equipped as per the Hydrus and Dorado class vessels.

They shall be EPA Marine Tier 3 certified engines with Marathon Mariner generators, Model 363PSL3127 rated at 105kW @ 95C/50C temp rise, 208VAC, including PMG and PM500 AVR with +/- 0.5 3 Phase sensing, heavy duty rectifier, reinforced windings and polybutadiene winding coating for salt air environment. A circuit breaker shall be installed in an enclosure, mounted on and wired to the generator set.

Pacific Power Group shall be contacted for a quote for configuration of the gensets matching WETA’s requirements.

Each generator shall be capable of supplying the Vessel's factored AC electrical load at eighty-five percent (85%) of its continuous rated capacity and shall be capable of starting the largest motor without requiring load shedding.

Voltage regulation shall be ± one percent (1%). The generators are not intended to be operated in parallel.

The generator sets (gensets) shall be provided and installed, complete with an active master local control panel, instrumentation, governors, regulators, alarm sensors, automatic and manual shutdowns, cooling systems with an engine mounted CuNi heat exchanger, FW cooling, wet exhaust, drip pan, 24V electric starting system, alternator and battery with appropriate bulkhead mounted charging system. The coolant header tank and remote reservoir shall have sight gauges installed to physically verify coolant level without opening the header tanks. The gensets shall be provided with an aluminum subframe and coated white in accordance with Section 633.

The gensets shall be test run at the factory under 100% load for four hours prior to Delivery. The purpose of this requirement is to "break in" the engines.

A fully manual means of starting and stopping generators shall be provided locally at the genset and be independent of the Vessel's automation system. A fully manual means of opening and closing generator and shore power breakers, including power available indicators, shall be provided locally at the switchboard and pilothouse. Start and stop functionality shall be independent of the Vessel's automation system. The automation system shall indicate the generator and shore power status. Indication alarms shall be integrated into the vessels alarm system to provide generator and shore power failure. Load transfer shall be protected and alarmed in order to preclude load transfer with reverse current.

Shore power interlock shall include phase monitoring to ensure shore power is phased correctly prior to closing the shore power breaker.

The OEM instrument panel shall include DC voltage, water temperature, oil pressure, Start/Stop and elapsed run time meters. The panel shall be located off the generator set and shall be resiliently mounted to an adjacent structure and arranged for ease of operation and monitoring. Displays shall not require scrolling to view normal operating parameters.

The gensets shall be provided with an OEM-supplied, integrated diagnostic panel providing comprehensive indication of the cause of generator set shutdown and faults. The generator sets and diagnostic panel shall be configured for engine room and pilothouse displays as per section 438.

313 BATTERY SYSTEMS

All batteries provided onboard the Vessel shall be maintenance-free AGM marine type as approved by the OWNER during the detailed design and engineering phase.

Batteries and battery banks shall be fully accessible for maintenance and located well clear of the bilge. All batteries shall be contained in USCG approved battery boxes with covers. All batteries shall be installed with USCG approved disconnect switches. All batteries shall be provided with appropriately sized chargers consistent with the requirements of the battery manufacturer.

Each propulsion engine shall be fitted with its own starting battery and charging system. Each ship service generator shall be fitted with its own starting battery and a fully independent battery charger.

The radio emergency power supply shall be a battery and charger that are sized and located to comply with both FCC regulations and the manufacturer of the radios.

Batteries providing emergency power support of the propulsion control systems shall be sized to provide a "get home" capability.

AC-powered battery chargers shall be provided by a single manufacturer, Mastervolt MASS Series.

Three (3) 120-watt solar panels shall be fitted. Two shall be series connected to provide 24 VDC via a solar controller and connected to charge the Pilothouse's 24 VDC batteries. The other shall be connected via a solar controller to charge the 12 VDC navigation batteries.

314 POWER CONVERSION EQUIPMENT

The CONTR shall provide voltage inverters to service any AC-powered navigation and communications equipment. All battery banks and chargers shall be fully integrated into the Vessel's alarm system. AC systems requiring backup power shall use properly sized and integrated marine batteries and inverters. UPS-type inverters shall not be used.

321 CABLES & CABLE INSTALLATION

VFD drives shall have their wiring isolated or shielded from other cables to prevent electrical noise problems. Control, sensing and data cables shall be mounted separately from line power cables.

Cables shall be low smoke zero halogen IEEE 45 approved. Cables shall be Tricad BV series or approved by the owner. Wiring and cabling shall meet the requirements of USCG and be of sufficient size to sustain enough fault current to trip the circuit breaker's instantaneous trip devices. Power distribution cabling shall be sized for a maximum voltage drop of five percent (5%).

CONTR shall install two spare multi-conductor (14/7 conductor) cables dead headed between each engine room and the Pilothouse, and engine room to engine room, and engine room and nearest lazarette.

CONTR shall install two spare power conductor (12/3) cables dead headed between each engine room and the Pilothouse.

Wireways shall be arranged to facilitate the operation, maintenance and future retrofits to the vessel. The wire ways shall be constructed from off the shelf components manufactured from aluminum and stainless steel that are light weight. Custom cross tier or tray wireways shall be review and approved by the OWNER in the detailed design and engineering phase.

Wireways in the machinery spaces shall be located such that the wireways do not affect access to the machinery for operation and maintenance. Wireways in machinery spaces shall also be located such that they do not represent a hazard to crew members under 6' 4" tall. wiring shall not be run on the tight side of the engines or in areas where such wiring will impact maintenance access. All wiring runs shall take into account access to the tight sides of the engines and access to drop the oil pan from the engine.

The CONTR shall create a detailed wireway drawing showing the routing and materials used for the wireways. The drawings will also show the standard attachment details and wire transit details. Wire transit details shall show transits through A class, C and C' class bulkheads in addition to any watertight transits. The drawing shall show standard details for those different types of transits including but not limited to the construction of the transit frame, the systems used to pack the transits and the Bill Of Material (BOM) showing the materials that would be ordered for the different packing systems. The BOM for the transits does not need to show quantities but will be used to ensure the transits are being packed properly and used for all future maintenance and alteration work to ensure the repair yards repack the transits with the same materials.

The wireways in the super structure will be reviewed to ensure the least amount of ceiling tiles need to be removed to pull new wires from the PH to the engine rooms and the switchboard. The design of the vessel will not be compromised to accommodate this but reviewed to ensure no unneeded jogging of the wireways or other oddities will take place.

322 SHORE POWER CONNECTION

One (1) 208-volt, 3 phase, 100 Amp shore power supply receptacle shall provide electrical supply to the Vessel when moored shoreside. The receptacle shall be located near centerline on the bow. The connection shall be per OWNER standard per Appendix B.

A marine isolation transformer shall be provided.

324 ELECTRICAL SYSTEMS - SWITCHBOARDS

For each of the two generator sets, provide dead front switchboards, or main distribution panels herein referred to as switchboards. Switchboards shall have electrically operated breakers with manual override capability. Each switchboard shall be arranged with feeds from each generator and the shore power transformer. Power for operation of the generator or shore power breakers shall come from the source side of the breaker. Power available and voltage indicators shall also be provided from the source side of the breaker.

The generator controls shall not have paralleling capability.

The capability shall be provided for operator selection of power source from the switchboard or the pilothouse.

Switchboards shall be provided with local instrumentation for monitoring voltage, current, and frequency of ship service and shore power.

The switchboards shall have sufficient reserve electrical capacity and physical space to support 10% future growth.

Ground fault detection systems shall be provided for both AC and DC ground faults with indication located in the pilothouse.

Switchboards shall be Affinity Power Systems or approved equal.

331 ELECTRICAL SYSTEMS - DISTRIBUTION

The primary generating voltage is 208 VAC, 3 phase, 4 wire. All distribution panels shall be from the same manufacturer.

Power distribution shall be a 3 phase, Y-connected, 120/208 VAC system with the neutral grounded to a single point on the common 208V bus.

Electrical loads on each AC panel board shall be balanced among the three phases within five percent (5%) of the average, except that non-simultaneous loads such as heating, and cooling need not be considered together.

AC Distribution panels shall be provided as required. Anticipated panel locations are in each engine room fiddley and in the Pilothouse. Snack Bar equipment shall be supplied from a dedicated distribution panel located in an OWNER approved location in the vicinity of the Snack Bar.

DC power systems including alarm and monitoring system, communication, and navigation systems shall be supplied from storage batteries with AC-powered charging systems as described in Section 313. Emergency lighting shall be supplied per Section 332.

DC-powered control, monitoring, and alarm systems, when fed from two sources of power, shall utilize diode, best battery selector, which will feed the higher voltage of either power source without relays.

Circuit protection for DC circuits, other than for engine starters, shall be provided by distribution panels. DC distribution panels shall be installed in the Pilothouse and as required elsewhere,

All distribution panels shall be inaccessible to passengers in crew-only spaces.

332 ELECTRICAL SYSTEMS - LIGHTING

The CONTR shall provide LED lighting throughout the vessel.

Lighting fixtures shall comply with USCG Regulations. Fixtures shall bear the UL Marine classification label suitable for the location where they are utilized. General lighting in the passenger areas shall be flush mounted, LED

down lights fitted with reflectors. Where possible, lighting fixtures shall be manufactured by one manufacturer, and shall have interchangeable components to the extent possible. Equipment and fixtures exposed to weather or dampness shall be watertight, with metallic parts made of stainless steel or non-metallic.

The lighting systems shall be designed and arranged to allow only the crew to control lighting in the passenger seating areas via group lighting controls in the Pilothouse. Docking and boarding lights shall be operable from the Pilothouse center helm station with fully backlit and dimmable dual position switches.

All stairways shall be adequately lit to provide safe passenger movement and support CCTV surveillance. Stairwells shall have approximately 50% more lighting then general areas.

Availability of spare parts shall be considered when selecting lighting equipment. Equipment with interchangeable parts shall be selected when practicable.

INTERIOR LIGHTING

Interior lighting in passenger areas and engine rooms shall be arranged in groups in such a way that if one circuit is out the others will give lighting coverage. One of the groups shall be a "night light" system to provide minimal but adequate lighting at night for the security cameras when the boat is non-operational and secured. This lighting shall also provide adequate lighting for the safe movement of crew and maintenance staff. The engine room lighting shall be controlled from the fiddleys. The Pilothouse overhead lights shall have a switch mounted at the entry door.

All other cabin lights shall be controlled from a Pilothouse AC power panel.

EXTERIOR LIGHTING

The Vessel shall be outfitted with exterior lighting of adequate capacity and locations to ensure passenger safety, but no fewer than twenty-four (24). All exterior light fixtures and junction boxes shall be heavy-duty marine grade items.

Exterior floodlights shall be controlled from a switch panel located in the pilothouse overhead. Lights shall be grouped and switched in zones to be determined during the detailed design and engineering phase.

Exterior located as follows:

- One each to illuminate the four side boarding stations from above
- One docking lights at each boarding station
- One foredeck light to illuminate the fueling operations
- One foredeck light to illuminate the shore power connection
- One foredeck light to operate the anchor
- One foredeck light for each line handling area.

Two remotely-controlled marine searchlights, Color Light CL25-11’s shall be provided on the top of the pilothouse mounted on pedestals Port & Stbd. Remote controls shall include adjustable focus (spot or flood), elevation (tilt) up, down, left and right. Port wing shall have controls for the port searchlight, Stbd shall have controls for the Stbd searchlight and the center helm station shall have controls for both searchlights.

EMERGENCY LIGHTING

Emergency DC lighting shall be provided in all spaces, including the engine rooms, which shall have emergency lights at the bottom of the ladder and over the switchboards. Emergency lighting in the passenger cabins shall be sufficient so that loss of AC power will not create a condition that will evoke passenger concern. The lighting called out below, properly applied should provide for distributed low level of lighting that will be noticeable to the passengers but not concerning. Emergency lights shall be powered from a dedicated twenty-four (24) VDC distribution system.

At a minimum emergency lighting shall be provided in the following places;

- All doors
- Pilothouse (Red)
- Top and bottom of all stairwells
- Egress paths
- Shorepower plug
- Snack bar
- Heads
- Switchboard
- Engine room access ladders
- Generator
- Main engine
- Emergency escape hatch
- Jet room access ladder
- Waterjets
- 333 ELECTRICAL SYSTEMS - RECEPTACLES

The CONTR shall provide at a minimum the receptacles listed in Table 333-1. Location of all receptacles is subject to OWNER approval. Watertight receptacles with ground fault interruption shall be provided for wet areas and as required by USCG. Exterior and engine room receptacles shall be fitted with weather-tight covers. All passenger and pilothouse receptacles shall include USB charging ports.

Table 333-1 Receptacles		
QTY	**Volts - Amps**	**Location**
As required	120-20	Snack Bar, to serve commissary equipment plus additional spare outlet.
As required	208-20	Snack Bar, to serve commissary equipment
40	120-15	Passenger use, in bulkhead of integrated into table leg by UES as needed
10	120-15	General use, such that any location can be serviced by a 20-foot extension cord
6	120-20	Engine Rooms (3 x each)
4	120-20	Pilothouse
4	120-20	Crew Stations (2 x each)
As required	120-20	Exterior Decks (2 x each deck)
4	120-15	Sanitary spaces (1 x each)
2	120-15	Jet Room (2 X each)

400 COMMAND AND MONITORING

401 PILOTHOUSE & CONSOLE ARRANGEMENT

The Pilothouse shall be configured with the following four control stations:

- Primary control and monitoring station located on the centerline forward.
- Observer's monitoring station located to the port of centerline forward.
- Port wing control station.
- Starboard wing control station.

The OWNER prefers (P/S) bridge wing control stations that are common to the bridge space, with a direct line of sight to the primary control and monitoring station. Exterior bridge wing control stations will also be considered. The bridge wing control stations shall be arranged to provide an unobstructed, direct line of sight to both forward and aft passenger boarding areas and line handling locations. To achieve this line of sight, each bridge wing shall have provisions that allow the vessel operator to extend their upper body beyond the side of the vessel. The CONTR shall however, make every effort to maximize the line of sight to both forward and aft passenger boarding areas and line handling with the window(s) of a common bridge space in the closed position.

The Pilothouse arrangement shall provide the best possible all-round visibility free from window reflections and refractions. Pilothouse windows shall meet the specifications of Section 625.

PILOTHOUSE

The Pilothouse is a secure space with no public access and shall be provided with locking doors. The Pilothouse shall at a minimum be outfitted with the following equipment and features:

- A locking file cabinet.
- Power receptacles per Section 333.
- HVAC per Section 514.
- Sun glare covers.
- Windows and shades in accordance with Section 625.
- Horizontal chart surface, with full size chart under non-reflective Plexiglas.
- Storage for charts, publications, flares and first aid kit.
- Storage for miscellaneous equipment.

CONSOLE

The console arrangement shall be of an ergonomically correct configuration, incorporating at a minimum, the specific equipment identified in Table 401-1 at each control station. The new console shall generally be arranged, built, and configured similar to OWNER vessels. The console shall be fitted with the following features:

- The console shall have a flat deck and an angled back panel.
- The deck, back panel, and all other such surfaces in the Pilothouse shall be provided with a matte black finish to prevent glare.
- A foot and knee recess at the helm station.

- The console shall incorporate a 4" by 4" toe kick at the bottom of the console where it meets the deck.
- Two (2) means of accessing the inside of the console.
- 3-way switched lighting with minimum three (3) fixtures under the console.
- Power receptacles per Section 333.
- HVAC to maintain temperature under console per Section 514.
- Two (2) binocular boxes convenient to each chair, location subject to OWNER approval.
- Two (2) keyboard trays convenient to each chair, location subject to OWNER approval.

The CONTR shall create a full mockup of the new console for OWNER approval prior to construction. The mockup shall show the arrangement of all equipment in the Pilothouse as well as the layout and orientation of Pilothouse console and demonstrate the layout of Pilothouse windows, especially as they relate to crew sight lines.

Table 401-1 – Control Station Equipment

Feature / Equipment	Spec Ref.	Port Bridge Wing Station	Observer Station	Center Helm Station	Stbd Bridge Wing Station
Full follow up tiller - console mounted, waterproof	252	x		x	x
Rudder angle indicators (included in waterjet controls)	252	x		x	x
Digital engine display for CFR119.410(b)	252	x		x	x
Dual function control heads (throttle and shifting) for port and starboard engines	252	x		x	x
Control transfer and accept button	252	x		x	x
Waterjet backup controls (steering and throttle)	252	x		x	x
Helm chairs	401		x	x	
Trackball & keyboard for operation of AIS/ECS (wired)	423			x	
Mouse & keyboard for operation of AIS/ECS (RF wireless)	423			x	
Radar displays	423		x	x	
Electronic chart display	423			x	
VHF Radios (3)	441			x	
VHF RAM microphones	441	x			x

Table 401-1 – Control Station Equipment					
Feature / Equipment	**Spec Ref.**	**Port Bridge Wing Station**	**Observer Station**	**Center Helm Station**	**Stbd Bridge Wing Station**
All navigation equipment displays	423			x	
All communications equipment controls				x	
Navigation lighting controls	422			x	
Port Searchlight controls	332	x		x	
Stbd Searchlight controls	332			x	x
Video surveillance monitors	439		x		
Whistle push button	444	x		x	x
AIS	455			x	
Man overboard button – linked to GPS & Nav displays	451			x	
PA system microphones	433	x		x	x

All instrument lighting (LCD, displays and status/alarm indicator lights, etc.) shall be equipped with physical dimmer controls for night operation and to minimize reflections. Dimmer range shall be infinitely variable from lights off through to full illumination. The console shall be equipped with glare shields for all displays to prevent direct sunlight and glare from shining on the display faces. The number of separate dimmer switches shall be kept to a minimum.

CAPTAIN'S CHAIR AND STOOLS

The CONTR shall provide and install two (2) metal, vinyl upholstered, captain's chairs in the Pilothouse. The chairs shall be of rugged construction using quality materials. The design of the chairs shall be ergonomically compatible with the duties of the operator. Chairs shall be manufactured by E. Vejvad Hansen of Denmark Skipper 502-lift Series or equal with full-follow-up jog (steering control) on the armrest. Chairs shall be approved by the OWNER.

The chairs shall be fully adjustable in the longitudinal position, seat height, backrest angle, and lumbar support. The chair locations shall be fully integrated with Pilothouse equipment including Vessel controls, radars, and VHF radiotelephones.

413 WIFI

The Vessel shall be delivered complete with an enterprise level crew and passenger cellular based WiFi system. The system shall be similar to the systems currently installed in WETA's fleet. The CONTR shall use ESS for the design and installation of the WiFi system so that it is compatible with WETA's fleet. Antennas, WiFi access points, routers and modems shall be determined by ESS for the arrangement of the proposed vessel.

421 NAVIGATION & SIGNALING EQUIPMENT

The Vessel shall be delivered complete with all supplementary navigation and signaling equipment required by the USCG to include but not be limited to:

- One (1) bell meeting regulatory requirements shall be mounted as directed by the OWNER.
- One (1) magnetic compass Ritchie HB-741-24V w/ light installed in the Pilothouse console at the steering station, positioned low and on centerline for ease of visibility by the helmsman. The compass card shall be selected for maximum visibility. Magnetic compass lighting shall be red for night operation and fully dimmable. The compass shall be swung and a deviation card provided.
- Chart 18649.
- Required publications including COLREGS, Coast Pilot and Light lists.
- Day shapes.
- Flares in waterproof container.

Table 421-1 provides specifications for equipment currently used in the OWNER fleet. The proposed equipment must have equal or better specifications.

Table 421-1 – Navigation & Signaling Equipment		
Binoculars	West Marine	2 Raiatea Waterproof 7x50 Center-Focus Binoculars, with installed holders
Clock and Barometer	Chelsea	Newport 4 1/2"
Magnetic Compass	Ritchie	Helmsman liquid beaded 3-3/4"

422 NAVIGATION LIGHTS

Navigation lights shall be provided in accordance with the USCG Navigation Rules, COMDTINST M16672.2D (COLREGS) applicable to the Vessel's size and intended service. Provided the vessel proposed is less than 50M in length the DHR 60 series lights shall be used. The DHR lights have primary and spare LED drivers and LED's, both shall be wired to the JBOX lighting panel.

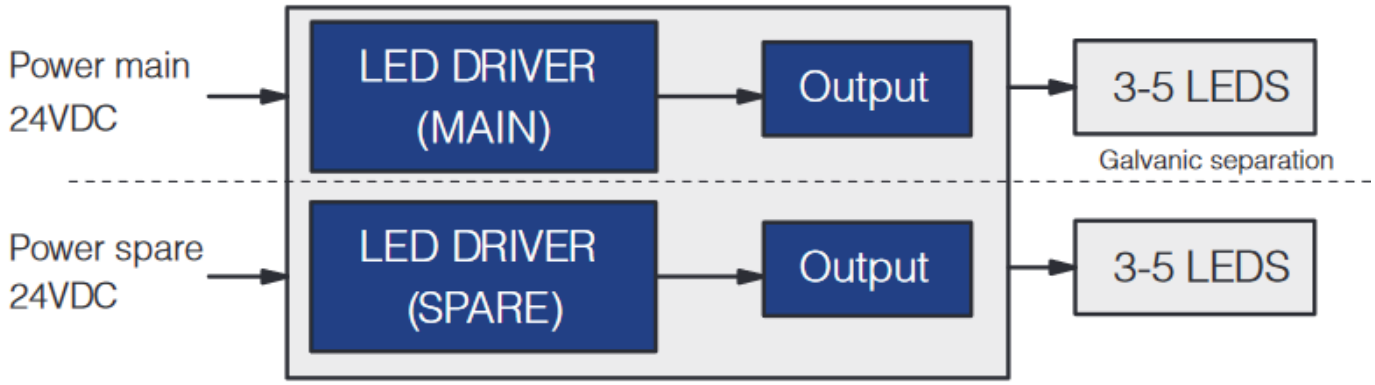

LED Navigation lights shall be controlled by a JBOX Inc. lighting control panel for LED navigation lights #NLFM5DUG24DCSP-PFA. The panel shall have both primary and backup lighting circuits wired to the fixtures.

423 NAVIGATION ELECTRONICS

Navigation and communications equipment shall conform to USCG requirements, and be augmented by the following requirements:

- Navigation electronics shall be interfaced to the maximum extent possible with communication with other navigation equipment.
- MOB button on dash that is integrated to radars, ECS and GPS.
- AC voltage ship navigation, communications and safety systems shall have backup DC power using marine inverters, batteries and chargers per Section 313.
- Primary Radar display mounted directly in front of the Primary Control Station. It shall be as per Appendix B with keyboard unit and track bar, retractable shelf
- Secondary Radar display mounted directly in front of the Observers Monitoring Station. It shall be as per Appendix B

The installations shall be free of electromagnetic or other interference and provide for superior performance.

All systems shall be in accordance with all USCG and FCC requirements.

The CONTR shall plan, design, engineer, procure, and install all new navigation, electronics, and communications systems. Appendix B provides specifications for equipment currently used in the OWNER fleet. The proposed equipment shall have equal or better specifications. All electronics shall be interfaced to the maximum extent possible.

432 TELEPHONE SYSTEM

An AIPHONE telephone system shall be installed between OWNER-approved locations:

- Pilothouse
- Each engine room
- Each jet room
- Crew stations
- Snack Bar

- Main Deck Switchboard

The system shall provide single pushbutton dialing. Power for this telephone system shall be provided from the emergency battery backup system. All phones shall be properly mounted and secured. Machinery Spaces will be provided with blue strobe lights to notify crew, AMSECO#SL-401B or equal.

A list of standard equipment used throughout the WETA fleet is provided in Appendix B and is typically provided, installed and serviced by Electronic System Support Inc. (ESS) Tel. (636) 677 0244 ext.110

433 PUBLIC ADDRESS & MESSAGING SYSTEM

The CONTR shall install a rack mounted PA system on the bridge in accordance to USCG regulations. Adequate space and slide rails shall be provided for access for connections and maintenance. Commercial/residential grade connectors and receptacles shall be replaced with hard-wired connections wherever possible. Where non-marine specific equipment is used, extra care shall be taken to secure electrical connectors, components and receptacles to prevent disconnection from vibration, vessel dynamic loads and maintenance access. All cables to the racks shall be arranged in an open mesh loom, properly secured to the rack and the vessels structure.

Jacks and microphones shall be provided at the Pilothouse console, wing stations and crew stations.

All speakers shall be high quality marine units. All exterior loudspeakers, junction boxes, and fittings shall be stainless steel or non-metallic, watertight, heavy-duty marine grade equipment with terminations sealed for protection against the effects of wind and water.

There shall be a sufficient number of loudspeakers located throughout the Vessel to meet the minimum requirements for sound pressure levels per USCG. Speakers shall be arranged in zones with individual zone volume control. The anticipated zones are:

- Foredeck
- Main Deck cabin forward
- Main Deck cabin aft
- Stern Deck
- Upper Deck cabin
- Upper Deck aft
- Pilothouse

The system shall be integrated with the video digital messaging system described in Section 448. This Standard Announcement & Messaging system shall be used for transmission of typical announcements/information throughout the Vessel. The system shall be arranged to receive user configurable, synchronized audio and visual announcements via a USB, SD or equal interface. The Standard Announcement & Messaging Panel shall have individual buttons to select one of eight (8) Standard announcements. Six (6) buttons shall have guards to prevent accidental initiation. The Standard Announcement & Messaging Panel shall be located in the Pilothouse within reach of the Helm Station, backlit and fully dimmable.

The audio PA system shall be designed to provide uninterrupted operation in the event of damage to a portion of the Vessel/system.

A list of standard equipment used throughout the WETA fleet is provided in Appendix B and is typically provided, installed and serviced by ESS.

436 GENERAL & FIRE ALARM SYSTEM

The CONTR shall install a General and Fire alarm system in accordance with USCG requirements. ~~This~~ **The General Alarm** shall be integrated with the PA system**, the Fire alarm system shall be stand alone**. Rotating lights shall supplement audible alarms in engine rooms and appropriate lights shall supplement audible general alarms in passenger spaces. AUTROPRIME BS-200M from AUTRONICA shall be used.

438 ALARM SYSTEM

The CONTR shall plan, design, engineer and install the Alarm System. Vessels in the OWNER fleet use custom standalone alarm systems from the following vendor:

- Custom ICMS from Axis Engineering, tel. (619) 757 3600.

The OWNER wishes to maintain commonality in the fleet to increase serviceability. The CONTR is responsible for all liaisons with the OEM in order to provide a complete system, including all hardware. The CONTR shall verify all CONTR furnished components of the system are compatible with the ICMS.

The system shall be arranged to alarm and annunciate in the Pilothouse and locally for engine alarms, ship service generator alarms, and ship system alarms. The alarms shall be self-monitoring, and independent of the functions monitored. Alarm sensors for ship service generators shall cause annunciation of the fault prior to reaching shutdown conditions. Alarms for ship's systems shall be audible (with an acknowledge button silencer) and visual.

Alarm and Monitoring functionality for all Vessel systems shall be integrated to the extent permitted by the regulatory agencies. The intent is to limit the number of system control panels installed on the Vessel. The CONTR shall include any other alarms that may be recommended by equipment manufacturers. The CONTR shall budget for an Integrated Control, Alarm and Monitoring measuring point list that contains up to of 200 channels. All of the inputs and outputs shall be determined and documented in a detailed I/O spreadsheet that will list every item, its point of interface, type of signal and sensor location. The intent of the spreadsheet is to have all of the information organized and documented so that there is no confusion about what sensors are begin used and how the systems will be designed.

All audible Pilothouse alarms shall be distinguishable as to system by different tones or tone patterns to the extent possible. All visual Pilothouse alarms shall be distinguishable as to system by differing light colors or light patterns. All alarms shall be on separate circuits in order to avoid cascading failures.

The system shall be fitted with a 19" touch screen display. The display shall include a physical dimmer and an alarm test feature. All touch screens shall be capacitive only, not resistive, with buttons adequately sized. Draft menus and pages shall be designed and provided to the OWNER for final layouts and approval.

All equipment that can be remotely started, from the Pilothouse or elsewhere, shall be fitted with a master cut-off switch at the equipment operating station in order to prevent personnel hazard.

Instruments in the Pilothouse shall give a complete readout of engine performance with audible and visual alarms of propulsion faults. Comprehensive main engine control, monitoring, diagnostic, and alarm electronic systems shall fulfill the requirements. All main engine and gearbox alarms shall be a MAN standalone system provided with the propulsion package. The MAN monitoring system shall be provided with the maximum level or monitoring and alarms possible. Any options for fine details shall be handled in the detailed engineering and design phase. The

intent is to get the best monitoring and alarm package MAN has to offer. The system shall be designed and built to classification society requirements even though the vessel is not classed.

The system shall be designed to operate at 85% (reduced RPM) of possible engine load. If it is possible between MAN and Hamilton, WETA would like to have 100% (Full RPM) load available but only if it is a "Full Power Mode" that then gets alarmed, logged with date and time so WETA can tell when "Full Power Mode" has been used and for how long. As implied the system shall log when the mode has been deselected and the alarm clears. The intention is too allow the operators access to full power but only if they can be held accountable for its use.

When an online generator fails an alarm shall signal this operation when it occurs. Essential navigation systems and equipment shall remain on during generator failures.

Table 438-1 – PILOTHOUSE CONTROL, ALARM & MONITORING			
	Monitor	Alarm	Control
SHIP SERVICE GENERATORS			
Generator start/stop	x		
Low lubricating oil pressure		x	
Low lubricating oil level		x	
Overspeed alarm		x	
High coolant temperature		x	
Low expansion tank water level		x	
Voltage monitor and over/under voltage	x	x	
Over/under frequency		x	
Starting battery low voltage		x	
Generator Failure		x	
Engine hour meters (if not covered in PPG package)	x		
SHIP SYSTEMS			
Main Engine Full Power Mode	x	x	
Breaker open/close gens and shore power	x		
Shorepower volts amps kw frequency, breaker condition	x		
Bus current monitor	x	x	
Bilge level in all voids and machinery spaces		x	
Fuel tank monitor and high (85% and 90%) and low level	x	x	

Table 438-1 – PILOTHOUSE CONTROL, ALARM & MONITORING			
	Monitor	Alarm	Control
Potable water tank level monitor, 100% High & Low level	x	x	
Sewage tank monitor and 90% High level	x	x	
Lube oil tank monitor and 90% High level	x	x	
DC control and alarm system low voltage	x	x	
Fire Dampers	x	x	
All ships batteries including inverter	x	x	
Fire & bilge pumps	x		x
HVAC systems	x	x	x

All tank level senders are to be pressure sensor type based on the fluids density. All low and high alarms are to be derived from the level monitoring sensor and adjustable in the system software by the OWNER. The location, mounting and details of the sender installation shall be reviewed and approved for each location dependent on the tank geometry and the fluid in the tank.

439 CCTV SURVEILLANCE SYSTEM

A complete closed-circuit color television (CCTV) system shall be installed with fourteen (14) video cameras topside, throughout the passenger spaces, and in the engine rooms, and with centralized monitor mounted in the Pilothouse. The system shall allow complete monitoring of the engine rooms, passenger spaces, stairwells and boarding areas from the Pilothouse and shall also enhance the master's view alongside and astern during docking and maneuvering. Final locations shall be approved by the OWNER.

The system shall be designed and installed with equipment as per Appendix B. Where options exist between Pelco and Bosch, Pelco is to be used. The system shall be complete in all respects including cameras, camera mounts and enclosures, power supplies, switches, digital video recorder unit and hard drive, dedicated computer (vibration isolated mounted) with RF wireless keyboard and mouse, 19” LCD color fully hardware dimmable marine monitor, foundations, cabling, fittings, cable penetrations, junction boxes, etc.

The CCTV system shall provide for continuous recording, with a minimum of 14-day capacity before overwrite. These cameras shall be vandal resistant, weatherproof and shall have internal heaters. Cameras in engine room shall be provided with motion sensing feature.

The dedicated computer and digital recorder unit shall incorporate an inverter with a DC power backup source.

Mounting and location of all CCTV components shall be subject to OWNER review and approval.

A list of standard equipment used throughout the WETA fleet is provided in Appendix B and is typically provided, installed and serviced by ESS.

441 RADIOS

The CONTR shall install three (3) new VHF radios, microphones, mounts, cabling, cable penetrations, antenna, antenna mounts, fittings, power supplies, connections, etc. as required in order to form complete marine VHF radio systems. Radios shall be as per Appendix B.

Provide and install two (2) VHF command ram microphones, one (1) at each bridge wing station. These microphones shall be wired off one of the overhead VHF radios. Install two (2) VHF radios in the overhead and one (1) in the console as designated by the OWNER. All radios are to be interfaced with GPS. All radio systems shall be in accordance with all USCG and FCC requirements. The installations shall be free of other radio interference, including interference caused by LED navigation lights.

443 DECK LOUDHAILER

Provide a complete loudhailer with foghorn as per Appendix B, with all required speakers, microphones, amplifiers, and other components. The deck loudhailer will be installed in the Pilothouse and shall feature hail, listen, talkback and fog signal. Four (4) exterior waterproof marine intercom speakers, at bow, stern and aft boarding area locations shall be installed. The use of impedance matching speakers in series and parallel configurations shall be used to allow all 4 speakers to be active at once. During detailed engineering and design phase the configuration of the loudhailer will be reviewed to ensure it meets these operational requirements.

External speakers shall be heavy-duty marine grade, stainless steel or non-metallic components and junction boxes. Mounting and location of all loudhailer components is subject to OWNER review and approval.

444 WHISTLE

An electric whistle shall be installed and shall comply with all USCG requirements. The whistle shall have an integrated fog signal feature. 2 each KB-30 Kahlenberg 24vdc (Fwd & Aft), CM-14 control module, M-512 24vdc Signal controller and M-313 6A horn buttons. Manufacturers drawing No.3-6942A represents the desired configuration. Only the external horn switches shall be required.

448 VIDEO SYSTEM

A video system shall be supplied for the Vessel comprised of up to six (6) 42" flat screen video monitors, distributed inside the passenger cabins. The system shall be capable of displaying video from a video digital messaging system.

The video digital messaging system shall be capable of feeding custom video messages as provided by the owner as well as digital video files to help the Vessel meet 49 CFR Part 39 American with Disabilities Act requirements for passenger vessels. Provisions shall be also made to allow for displaying paid advertisements.

The video digital messaging system shall be controlled from the Pilothouse and used to provide safety messaging and arrival and departure messaging in conjunction with the Public Address system described in Section 433.

A list of standard equipment used throughout the WETA fleet is provided in Appendix B and is typically provided, installed and serviced by ESS.

451 GLOBAL POSITIONING SYSTEM (GPS) AND ELECTRONIC CHARTING SYSTEM (ECS)

The CONTR shall provide a GPS system as per Appendix B with a Man Overboard (MOB) button mounted on the dash, with the type and location to be approved by OWNER. The GPS shall be interfaced other navigation displays, at a minimum with the radars, VHF radios and Electronic Charting System.

The CONTR shall provide a complete personal computer (PC)-based hardware with MS Windows and software installation as per Appendix B to support independent electronic charting. Provide signal inputs from the GPS, AIS and all navigation inputs. Provide electronic charts for complete coverage of the routes to be served. Provide electronic charts for full coverage of the delivery voyage if the Vessel is to be sailed to San Francisco for delivery. The PC shall be a marinized, fanless unit with a solid state hard drive operating on DC power. The PC and its CPU, graphics and memory shall exceed the minimum hardware requirements of the navigation software, providing capacity for future software upgrades.

Only physical, hardwired com ports should be used. Serial to USB or similar adapters should not be used. Primary user interface will be a trackball and keyboard. A Secondary user interface shall be provided comprised of a RF wireless keyboard and mouse.

Mounting and location of all electronic charting components shall be subject to OWNER review and approval.

455 AUTOMATIC IDENTIFICATION SYSTEM (AIS)

Provide complete installation for the AIS system as per Appendix B. The AIS shall be integrated into the Electronic Charting System personal computer. Mounting and location of all AIS components shall be subject to OWNER review and approval.

465 DEPTH SOUNDER

Depth Sounder shall use a transducer model designed for 40 knots and as per Appendix B. The transducer shall be faired on the outside of the hull to prevent false signals. A coffer dam shall be installed in way of the transducer hull penetration with details approved by the OWNER. The transducer shall be stainless steel.

500 AUXILIARY SYSTEMS

505 GENERAL PIPING REQUIREMENTS

All piping shall conform to USCG requirements for strength, materials and testing. Piping and system components shall be in accordance with:

- the requirements of this section
- the specific system details contained in this specification
- The WETA standard piping materials matrix in Appendix B

Piping runs shall be straight, neat, and out of the way of walkways and passageways. Pipe hangers welded to ship structure shall be suitably located to support pipe against stress and vibration. Wherever piping must be removed for maintenance or replacement of other components, flanges or take- down joints shall be fitted. Piping to rotating machinery shall have flexible connections of components suitable for the pressure and service.

Piping shall not be run on the tight side of the engines or in areas where such piping will impact maintenance access. All piping runs shall take into account access to the tight sides of the engines and access to drop the oil pan from the engine.

All piping system fasteners shall be 316 stainless steel.

To the greatest extent possible, pumps for a given service shall be provided by the same manufacturer and shall be of the same size and material.

Shore interface fittings shall conform to OWNER standard in Appendix B. All valving, fittings, and fasteners shall be high quality marine grade materials. Pot metal or nickel-plated components shall not be used.

All pipe hangers and clamps shall be stainless steel with non-conductive bushings around the pipe, ZSI Alpha, Beta or Omega series clamps.

All valves shall be high quality, quarter-turn butterfly or ball style unless required otherwise by regulatory agencies. Valves in seawater systems shall have highly corrosion resistant discs and stems i.e. Monel, Inconel, Hastelloy or equal. All seawater valves and piping shall be isolated from the hull for galvanic protection. The CONTR shall ensure all valves handles rotate in the same direction (e.g. clockwise to close or vice versa).

All valves located below deck plates shall be equipped with reach rods to be accessible from the deck plates without removing deck plates. Removable or hinged deck access hatches shall not be used to access valves unless approved by the OWNER.

All check valves shall be entirely constructed from a highly corrosion resistant material appropriate for the service intended. As an example, materials would be 316 Stainless Steel, MIL SPEC Bronze/Monel, Inconel or Hastelloy. Check valves shall not be used in sea water systems unless specifically approved by the OWNER for the material, locations and orientation of the valve.

506 VENTS, FILLS, AND SOUNDING SYSTEMS

All spaces and tanks shall be vented as required by USCG regulations. All vent openings to weather decks shall be fitted with stainless steel insect screens. Screens shall be accessible for cleaning and replacement. Vent and fill caps shall be color coded to show service following OWNER standard piping system colors in Appendix B. All vents for

systems containing oil/fuel/urea or hazardous waste shall terminate above a spill containment. The containment shall have a removable plug for drainage.

Tank vents and load/off-load connections shall be configured and located such that they are not subject to mechanical damage during docking.

Visual indication be provided for fuel tanks, oil tanks, urea tanks, hydraulic tanks as well as the electronic tank level indicators. Sight gauges shall be GEM SureSite style indicators fabricated from 316SST. The CONTR shall not use the clamp on sensors on the SureSite gauges for alarms. All alarms shall be derived from the tank level senders. Tank level indication shall be provided through the alarm system as described in Section 438.

Inspection by deck hatch is acceptable for void spaces if the lowest point is visible from the deck hatch location. Otherwise, a sounding or ullage system shall be provided to determine water levels in voids.

Shoreside Connections and fittings shall be provided in accordance with Appendix B.

FUEL OIL

The fuel oil system shall be arranged so that both fuel tanks can be filled from the bow. Fuel oil fill piping to the storage tanks shall be consolidated into a central single fueling containment complete with a cofferdam and drain. Fuel tank vent system piping shall also be located within this containment area. Flameproof vents shall be fitted on each fuel tank and mounted vertically with the opening facing down. Fuel oil fill piping and vents shall be sized for fueling at sixty gallons per minute (60 GPM) from the deck fill connections to the tanks.

A two-stage high level alarm system completely independent of the primary sounding and measuring system shall be installed to prevent overfill during refueling operations. The alarm shall provide the following indications of the tank level status during refueling:

- Two (2) lights (AMBER, RED), nominally set for eighty-five percent (85%) and ninety-five percent (95%) tank capacity and located at the foredeck fueling containment. Lights shall be waterproof and be made from SS or high-quality marine grade plastic with test function.
- Audible alarms at the foredeck fueling containment and, in the Pilothouse, with the ability to silence locally or through the ICMS.

The refueling alarm shall utilize a dedicated tank level sensor in the tanks or demonstrate equivalent redundancy and have adjustable alarm points for initial setup. The refueling alarm system shall have a master switch located at the refueling station.

The fuel tank sight gauges shall be remotely installed on the engine room bulkhead for maximum utility and visibility.

POTABLE & FRESHWATER

Water tank fill and vent shall be located on the bow, separate from the fuel fill station.

LUBE OIL

A common clean oil fill/dirty oil discharge connection will be installed adjacent to the Port and Starboard engine room entry doors in a dedicated containment. Tank vents shall terminate in this containment.

SEWAGE

Sewage tank suction shall be located on the bow and provided with a dedicated containment. The discharge connection shall be valved and capped and be directly compatible with the shoreside hose fittings. Sewage tank vent shall be located in such a manner as to keep odors away from passenger and boarding areas.

507 PIPING DESIGNATION & MARKINGS

All piping systems shall be color coded and stenciled in large letters at least twice in each compartment to indicate their service as set forth in Appendix B. Arrows of contrasting color to the pipe shall be applied to the pipes to indicate the direction of fluid flow under normal conditions.

All valve wheels and handles shall have engraved stainless steel name tags attached that indicate the system, purpose of the valve, and the normal position if appropriate. For example:

POTABLE WATER FILL
NORMALLY CLOSED & LOCKED

All nameplates shall adhere to the equipment with a permanent marine adhesive, 3M 5200 or approved equal.

514 HEATING, VENTILATION, & AIR CONDITIONING (HVAC)

Complete heating and ventilation systems shall be provided for the Vessel to maintain passenger comfort while underway. Designs shall conform to applicable regulatory requirements, SNAME Technical Bulletins and ASHRAE Handbooks.

Final equipment sizing, air quantities, locations and sizes for ductwork, fans, room diffusers, fire and balance dampers, return and exhaust grilles shall be determined by the CONTR to meet the requirements of this Section.

Table 514-1 – HVAC DESIGN CRITERIA

Criteria	Cooling Season	Heating Season
Weather	100° FDB - 71° FWB@2.5%	32° FDB
Sea Water	70° F	50° F
Passenger Cabins / Pilothouse	74° FDB - 62° FWB	72° F

Heating System

The enclosed passenger cabin and Pilothouse shall have space heating installed that is capable of maintaining the Passenger Cabin Temperature per Table 514-1.

PASSENGER CABIN VENTILATION SYSTEM

The passenger cabin shall be provided with ventilation openings sufficiently sized and located to maximize passenger comfort during summer months. The vents shall be arranged to maintain the flow of fresh, cool air throughout the passenger cabin. Vents shall be arranged to draw from the coolest, odor free, clean air supply available and care shall be taken to avoid the ingestion of exhaust fumes, hot air and noise from machinery or wind.

Ventilation fans shall be provided to maintain air movement throughout the cabin when stationary or at slow speeds. Ventilation fans shall have controls with automatic functionality based on user defined temperature setting. The thermostat shall be located in the Pilothouse.

PILOTHOUSE AIR CONDITIONING

Air conditioning shall be provided in the Pilothouse space ~~only~~. Air conditioning shall be accomplished by means of self-contained, roof mounted units or equal arrangement sufficiently sized to maintain the Pilothouse Temperatures per Table 514-1.

PILOTHOUSE DEFOGGING

HVAC system design for defogging of Pilothouse windows shall be properly sized to keep all Pilothouse windows clear of fog under all conditions of weather. The fans associated with the Pilothouse defogging system shall be quiet type multi-speed fans to allow operator selection of at least three (3) levels of defogging. The CONTR shall ensure that Pilothouse HVAC and defogging systems meet the noise criteria as established in Section 089 when the fans are being operated at their highest speed setting.

FIRE DAMPERS

All fire and balance dampers shall be installed with full and easy access, allowing for complete operation, maintenance, and inspection of the dampers. Fire damper installation shall allow one (1) member of the crew open or reset all of the fire dampers with a single emergency button located in the pilot house. All fire dampers, actuators, fasteners, bushings and components shall be constructed from stainless steel or non-corrosive materials. Unless specifically approved by the OWNER the fire dampers for the HVAC systems shall be electrical actuator type.

MACHINERY SPACE VENTILATION

The Engine Room ventilation system includes the combustion air and is specified separately in Section 251.

All spaces below decks that contain machinery shall be mechanically ventilated in order to maintain space temperatures and air quality suitable for human occupancy and provide ample ventilation for installed equipment cooling. The fire dampers for the engine rooms are to be provided with a manual close switch. The switch type, location and all details of its implementation shall be specifically reviewed and approved by the OWNER.

VOID VENTILATION

Every void in the vessel shall be ventilated with power ventilation. Non-machinery voids with low heat loads shall be ventilated with Delta-T 500-804XL fans to provide for some air change in the spaces. All supply and exhaust connections shall be designed to inhibit the ingestion of saltwater to the maximum extent possible. All supply and exhaust air terminations shall be fitted with WINTEB 2000HIAS series float checks.

524 AUXILIARY SEA WATER COOLING SYSTEMS

The CONTR shall provide complete piping systems to support the seawater cooling requirements of auxiliary machinery and other installed equipment as required. Individual system sea chests or thru hulls may be consolidated in a single sea chest as approved by the OWNER. Quick-opening sea strainers shall be installed ahead of all pumps and machinery with appropriate sea valves, isolation valves, gauges, and vents. Special care and attention shall be given to the arrangement and operability of the valves and access to the strainers. Stainer's shall be simplex cast bronze Eaton 72 series strainers.

Seachest coating shall be provided IAW section 631.

526 DRAINS

Drained water shall be collected and led overboard through downspouts. Drain shall be arranged such that puddles of standing water do not collect. Horizontal piping shall utilize CPVC piping whenever possible as 6061 piping in deck drains suffers from corrosion problems in the long horizontals.

Trapped deck drains shall be provided in all restrooms, storerooms, and the Snack Bar. These drains shall be directed to the sewage tank. Whenever possible CPVC shall be utilized for piping. Use of CPVC for P-traps under deck drain are required. No deck drains with integral P-traps shall be used. All CPVC shall be ASTM D1785 type.

528 SEWAGE SYSTEM

A sewage system shall be installed, collecting sewage from all installed toilets. The system shall be designed and installed to meet all USPHS regulations. The sewage-holding tank shall be sized per Table 126-1. The sewage tank shall be fitted with a high-level alarm set to 90% and tank level indication in the Pilothouse per Section 438.

The CONTR shall take particular care to properly slope the drains to the sewage tank and to provide convenient clean out ports for snaking lines.

The toilet flushing system shall be a Headhunter system utilizing low volume toilets. The toilets shall use fresh water and the supply shall be fitted with a proper USPHS inspected and approved back flow preventer. Toilets shall be fitted with a remote pushbutton mounted in the bulkhead as directed by the OWNER.

All gray water drains shall be connected to the sewage tank and shall include accessible traps fabricated from CPVC.

The sewage discharge pump shall be installed to draw from the tank and discharge to the offload shoreside connection located on the bow as described in Section 506. The sewage discharge pump shall be sized to off-load 500 gallons in five (5) minutes. The pump shall be installed in accordance with the WETA standard detailing in Appendix B with provisions for removal from the tank.

Weatherproof, lockable sewage pump controls shall be located adjacent to the shore connection fittings with a hold to pump pushbutton to prevent running the pump dry for extended periods.

A flushing fitting shall be provided adjacent to the discharge connection for flushing the shoreside discharge hose with fresh water after sewage pumping and prior to decoupling the shoreside hose. The flushing fitting should be sized to receive a 1-1/2” fire hose connection.

Sewage pump suction and discharge piping shall be installed using long radius fittings or equivalent pipe bends.

529 BILGE AND FIRE SYSTEM

Bilge piping and pumping systems shall be provided and installed so that bilges can be pumped overboard for purposes of emergency dewatering.

A fire main system shall be installed, serviced by a fire pump with fire stations located and equipped to suit USCG regulations. Fire pumps may not double as bilge pumps. Fire and bilge pumps shall be stand alone and self-priming.

Bilge pumps shall be standalone with individual pumps located in each compartment as necessary to satisfy USCG requirements and installed in accordance with the WETA standard drawing provided in Appendix B. The overboard

check valves and pipe shall be sloped towards the overboard to ensure water and salt can not accumulate in the pipe and on the face of the check valves.

The fire and bilge pumps, and related systems, shall be operable from the Pilothouse as well as locally at the entrance to the space being pumped. As an example, for the engine rooms the controls would be at the engine room fiddley.

The fire main hose stations shall have recessed fiberglass enclosures. The vessel shall be fitted with fire systems in each hull, with appropriate cross connections. The CONTR shall provide complete systems to include pumps, piping, valves, gauges, and hull fittings.

533 POTABLE AND FRESH WATER SYSTEMS

Potable and fresh water systems shall be combined systems with appropriate safeguards to ensure adequate separation of the subsystems in terms of health requirements. The design and installation of the potable water and fresh water systems shall satisfy all health regulations of the USPHS.

All potable and fresh water shall be filtered ahead of the pump with a cartridge type mechanical paper filter. The potable water subsystem shall be filtered again after the pump with a cartridge type charcoal filter. Arrange filters next to each other with bypass lines and isolation valves to facilitate filter changes.

The potable water system shall include the freshwater storage tank, a filter system, a hot water tank, and potable water distribution to restroom fixtures, drinking fountains, commissary equipment and fixtures, and cleaning stations. Hot potable water shall be provided to all sinks. All potable water fixtures shall have an isolation valve installed in the potable water supply piping to the end faucet. The isolation valve shall be located as close to the fixture as practicable and shall be readily accessible for operation.

To facilitate Vessel cleaning, provide cold-water hose bibbs in the disabled-accessible restroom and in each engine room. Additionally, hose bibbs shall be provided on exterior bow and stern deck for crew use. Bow water supply shall have sufficient pressure to spray the Pilothouse windows.

A dedicated bicycle washing station with coiled hose shall be provided adjacent to the bike rack.

All hose bibs, flushing circuits and non-potable connections to the fresh water system shall be serviced from a single backflow preventer for the entire non-potable circuit. The vent (on the bottom) from the backflow preventer shall not drip onto any sensitive equipment when it eventually leaks. Back flow preventers shall meet USCG and USPHS requirements for such devices.

Potable water systems shall be flushed and disinfected in accordance with accepted standards for such procedures. The CONTR shall be wholly responsible for obtaining certification that the potable water system is fit for human consumption.

The CONTR shall provide a fresh water subsystem to also supply fresh water to:

- The Pilothouse window washers.
- The toilet flushing system.

555 FIRE SUPPRESSION SYSTEMS

Fire detection, alarm and suppression systems shall be installed to protect machinery spaces in accordance with USCG requirements.

The CONTR shall use FM200 for fire suppression unless a suitable alternative is approved by the OWNER. The final details and arrangements of the system shall be determined during the detailed engineering and review process.

All fire dampers shall have DC electrical actuators that can be reset by one crew member when they reset the fire system pressure switch. Indication of the fire damper orientation (Open/Closed) shall be indicated on the Alarm system, see section 438.

581 GROUND TACKLE

The CONTR shall provide ground tackle in accordance with the following requirements. In the development of the design and location of ground tackle, the CONTR shall ensure that it cannot be fouled with terminal and dock facilities by locating the anchor in a recessed storage pocket to one side of the Vessel centerline.

A lightweight DANFORTH (Fortress manufacturer) type anchor of appropriate holding power shall be provided. The anchor shall be attached to high strength galvanized stud link chain and 300' of nylon line with an orange marker buoy attached. The chain, line, and buoy shall be fitted and stowed forward, with provisions for quick release without requiring the crewmember to lift outside the railing.

The bitter end of the anchor line shall be securely attached to hull structure. The line shall be complete with closed eye socket, and shall have all necessary detachable links, swivel and fittings required for a complete anchoring assembly.

Any sliding surface for anchor movement shall be faced with UHMW plastic.

582 MOORING

Provide a minimum of fifteen (15) bitts and cleats to accommodate existing terminal facilities during all conditions of weather and tide. The CONTR shall develop a Mooring Plan, for OWNER approval. The Mooring Plan shall detail the type, number, location, and arrangement of mooring fittings. Mooring cleats shall be provided and “through rail” welded, not surface mounted. At least 6" of clearance shall be provided around cleats of bitts for safe handling.

The bitts and cleats shall be vertically positioned at main deck level. Keyhole any bulwarks in the way of line handling fittings.

The lines utilized for Vessel docking are of fixed length; this requires that the orientation of mooring fittings to the passenger boarding doors be dimensionally exact. The CONTR shall shipcheck the existing OWNER vessels and passenger dock and provide mooring fittings that are compatible with the Mooring Interface drawing provided in Appendix B.

The vessel shall be fitted with full-length rub rails that extend least 12" out from the side plating. The top of the rub rail shall be vertically positioned at the same height as the main deck. The top surface of the rub rail shall be painted with non-skid, see Table 631-1. The vertical face of the rub rail shall be left unpainted.

In developing the Mooring Plan, the CONTR shall take into account the following:

- Standardized sizes and locations for cleats and bitts.
- Cleats fore and aft of each boarding area, with a minimum of 6" of clearance from superstructure and boarding gates for safe make up of line.
- Cleats and bitts provided with line cuts in bulwarks where needed.
- Adequate open deck space around deck fittings to ensure safe footing.

583 LIFESAVING EQUIPMENT

Life-saving and safety equipment at a minimum shall meet USCG requirements except the following:

- Inflatable Buoyant Apparatus (IBAs) for 100 percent (100%) of the Vessel shall be provided, fully outfitted and installed in locations approved by the USCG and the OWNER; with means for one (1) person launching.
- Life Jackets shall be provided in accordance with USCG requirements. Life Jackets shall be stored in dedicated bins or cabinetry which is integrated into the vessel's interior outfit. Life Jacket storage shall be consolidated to the extent allowable by USCG to eliminate the number of storage locations. Life jackets shall be Jim Bouy to be consistent with the WETA fleet.
- Additional stowage shall be provided for a total of one hundred (100) child size life jackets; this exceeds the ten percent (10%) USCG requirement.
- Life preservers shall be stowed on both passenger decks in ratios proportionate to the seating.

The CONTR's design shall completely outfit the forward boarding areas on each side of the Vessel for overboard recovery using a JASON'S CRADLE recovery system. The boarding areas shall have sufficient space for two personnel to rig, install, operate and recover personnel from the water. The vessel shall be equipped with a fully automated, electric motor driven Jason's Cradle storage reel. The CONTR shall construct a recessed cavity in the overhead, directly above each forward boarding area. The cavity shall provide sufficient volume to house a reel while supporting the recovery geometry shown in the WETA standard detail. The CONTR can view details of this installation by ship checking the Hydrus or Pyxis class vessels for all of the automation equipment including the electric motor, brakes, controllers etc. The final details shall be reviewed and approved in the detail design and engineering phase of the project.

- Four (4) Crew PFD Work Vests, one with 50' of 3/8" floating line attached by safety carbineer.
- Two (2) boat hooks, aluminum pipe with bent sheep's crook; provide stowage clips or brackets at each end of the Vessel at an OWNER -approved location.

The CONTR shall prepare a list of all proposed lifesaving equipment for OWNER's approval.

600 OUTFITTING

601 GENERAL ARRANGEMENT

The OWNER desires a modern, easily maintainable interior with a light, open aesthetic and good exterior visibility through large windows. Every effort shall be made to maximize passenger privacy while adding interest to the passenger seating arrangement through various combinations of aircraft-style seats and booths with tables and bench seating.

The CONTR shall determine a Vessel arrangement that includes, but is not limited to, the following general features on each deck:

PILOTHOUSE

- A raised Pilothouse with 360-degree visibility is desired. Pilothouse requirements are further specified in Section 401.

INTERIOR DECKS

- A mixture of interior seating, per Section 645.
- Snack Bar per Section 651.
- Ticket Station per Section 651.
- Utility Storage Space per Section 654.
- Unisex and ADA passenger heads per Section 644.
- Wheelchair provisions per Section 092.

EXTERIOR DECKS

- Bicycle stowage per Section 672.
- A mixture of covered and uncovered exterior seating per Section 645.
- All boarding facilities.
- Crew locker space per Section 671.

602 HULL DESIGNATING & MARKING

The CONTR shall furnish all nameplates, notices, notice frames, markings and labels, required to complete the Vessel to the satisfaction of the USCG and all other regulatory agencies. This includes the ship name on each side of the bow, and the ship name and hailing port across the stern, deck plans, safety plan, a CONTR's nameplate, and all licenses and certificates required for posting.

The CONTR shall provide Vessel name lettering and hailing port lettering made from 1/8" thick aluminum plate. The lettering shall be permanently welded to the Vessel at locations approved by the OWNER. Size and style of the lettering shall also be subject to OWNER approval thirty (30) days prior to beginning this work. The lettering shall be preserved and painted following installation.

All nameplates, labels and identification tags shall be permanently adhered to the equipment or adjacent surface with a marine adhesive, 3M 5200 or approved equal.

The CONTR shall provide interior signage in accordance with the WETA standard drawing provided in Appendix B and additional signage as required to encompass:

- No Smoking signs.
- Fire door markings.
- Video surveillance.
- Seats reserved for disabled and elderly.
- No Admittance, Crew Only.
- Lighted exit signs.
- Lifesaving equipment locations.
- Life preserver markings.
- Life buoy markings.
- Boarding direction signs.
- Instructions for use of lifesaving equipment.
- Any and all markings and notices required by USCG.
- Signs denoting mobility impaired (wheelchair) facilities.

All vents, fills, and shore side connections shall be clearly marked to show their purpose and restrictions on their use.

Pipe marking details are provided in Section 507.

Fire hydrants and firefighting equipment shall each be marked to indicate the station number and hand-held fire extinguishers shall be marked with the location of their station, all per USCG requirements.

Service and other spaces not otherwise required to have markings shall have identification plates of 1/8" thick engraved aluminum material. Markings shall be compatible with the interior design scheme.

If the Vessel is provided with certified spaces (certified for deduction from gross tonnage as determined by the Tonnage Admeasurer), those spaces shall be permanently marked by center punching as required by admeasurement regulations.

Emergency lights shall be marked with a 1" high letter "E", with white lettering on a red background.

To facilitate future blasting and painting of the hulls, provide permanent skip weld marks to indicate the boot stripe location along each hull, at full load static displacement plus 6".

603 DRAFT MARKS

The CONTR shall provide vessel draft markers made from 1/8" thick aluminum plate. The draft markers shall be permanently welded to the Vessel at locations approved by the OWNER. Size and style of the lettering and draft markers shall also be subject to OWNER approval thirty (30) days prior to beginning this work. The lettering and draft markers shall be preserved and painted following installation.

604 LOCKS, KEYS, & TAGS

Weather tight doors and all joiner doors, except where otherwise specified, shall be fitted with cylindrical type locksets, with latch bolt operated by knob from sides, cylinder outside, and no means of locking on the inside.

Pilothouse doors shall have cylindrical locksets with latch bolt operated by knob on the inside, cylinder on the outside and thumb turn on the inside. Interior fire doors in main vertical zone bulkheads interior stairway enclosure doors and interior passage way doors shall have cylindrical type latch sets with knobs free on both sides. Doors held open by magnetic holdbacks shall have flush-ring type handles.

All door locks on the Vessel shall be set up for single OWNER grand master key operation. The OWNER shall provide the CONTR with a Master Key.

The overall number of keys on the vessel shall be minimized and consolidated to the maximum extent possible; all keys shall be tagged and indexed.

The CONTR shall provide locks and keys for the four (4) crew lockers.

The CONTR shall provide and install a complete indexed key locker in the Pilothouse, with 4 sets of clearly marked keys of all locks.

External hatches leading to engine rooms, void spaces and other machinery spaces shall be furnished with hasps and padlocks or equal locking provisions for securing with a padlock. Manhole keys and/or wrenches shall be provided and stowed as directed by the OWNER.

612 RAILS, STANCHIONS, & LIFELINES

Handrails, grabs, and/or bulwarks shall be fitted on all decks where necessary for the safety of passengers, and for crew access. Full length hand rails shall be fit along the exterior sides of both the main and second deck for crew access, cleaning, and line handling. Intermittently placed handholds will not be acceptable. Handrail stanchions shall be of non-corrosive material. Where breaks are required for line handling, portable handrail sections and suitable grabs shall be provided for the safety of line handlers.

Provide personnel safety equipment, harnesses, tracks, rigging, fittings, railings etc. to enable crews to externally deploy lifesaving gear, service cabin top equipment, wash and maintain all windows.

The CONTR shall ensure ready access to the bow of the Vessel for the crew by providing cutouts or gates, which permit safe transit to the bow area for line-handling or other purposes.

Exterior observation decks shall be fitted with handrails and bulwarks up to a height of 42" to protect against small parcels or children falling overboard. Handrails shall be supported such that they are free from vibrations at all engine RPM’s and that reasonable loads developed by passengers do not deflect the rail course by an unacceptable amount.

Handrails shall be installed as required around machinery and elsewhere for safety of operation. Handrails shall be removable where they may interfere with repair or maintenance of equipment.

621 NON-STRUCTURAL BULKHEADS

The CONTR shall provide and install panel joiner bulkheads with finishes in accordance with the final approved interior arrangement drawings and the manufacturer’s recommendations. All joinery systems shall conform to the fire load, structural fire protection and other interior design standards as dictated by the USCG for a Vessel of this type and passenger capacity. Where possible, all lightweight materials shall be used to lower the overall weight of the Vessel.

The CONTR shall provide and install new tile-style ceiling panels as specified in Appendix B.

622 FLOOR PLATES & GRATINGS

In machinery spaces, suitable gratings and flats shall be installed to allow safe access to all machinery. Deck plates and gratings shall be of aluminum anti-slip plate, flanged, and fastened to framing with standard slot type 316 stainless steel countersunk Phillips head deck screws of proper length. Ladders to machinery spaces shall be inclined versus vertical wherever practicable.

Lifting padeyes shall be installed above all engine room ladders to allow for easy lifting of parts, motors, and other heavy equipment. Lifting padeyes shall also be welded to overhead framing to facilitate equipment change out where the weight of said equipment exceeds sixty-five (65) pounds. All padeyes shall be weight tested and marked accordingly, and rated at 1000 pounds minimum.

Shaft couplings, belt drives, and other rotating and exposed machinery shall be fitted with removable guards to prevent personnel injury.

623 LADDERS AND STAIRS

Ladders shall be provided for access into all spaces. Ladders to machinery spaces shall be inclined versus vertical wherever practicable.

Vertical ladders in general, as well as inclined ladders to machinery spaces, shall be of aluminum construction where allowed, fitted with hand rails and overhead grabs as required for safe use. All surfaces of ladders shall be free of sharp corners.

Interior stairs between passenger spaces, arranged and dimensioned to support the passenger offloading requirements of Section 063, shall be designed for loads of at least 200 pounds per square foot. Stairs shall be fitted with handrails and non-slip deck treads. Treads shall be Wooster STAIRMASTER as per Table 634-1. Wherever installed, non-slip treads shall not present a tripping hazard. Handrails supported by bulkheads shall have a clear hand space per ADA guidelines.

624 NON-STRUCTURAL CLOSURES

Hardware including doors, door hardware, trim, fasteners and attachments shall be corrosion resistant satin finished stainless steel unless otherwise approved. All hardware shall be of the best marine quality, TrioVing or equal.

Doors shall be Pacific Coast Marine. Provide a security peephole in the Pilothouse door(s).

Provide rubber button stops and catch hooks for all doors. Doubler plates shall secure stops and hooks to the respective bulkhead or structure.

All exterior weather tight doors shall be fitted with closers and single lever dogs.

In general, interior doors shall be fitted with closers and not swing into an aisle or passageway. Door thresholds and sills shall meet the ADA requirements of Section 092 and incorporate fairings to eliminate all tripping hazards. All Interior doors shall be fitted with closers requiring less than five (5) pounds of pressure for operation.

All doors, interior and exterior shall be fitted with hold opens (except fire doors). All hold opens shall be located at the same height where they are accessible to all crew members without bending over. All hold opens shall be of the same type as reviewed and approved by the OWNER.

625 AIRPORTS, FIXED PORT LIGHTS, & WINDOWS

Windows in the passenger spaces shall be of the bonded, frameless type and installed using an approved marine grade adhesive system such as Sika, 3M or equal. The glass shall be high quality laminated safety glass or monolithic tempered/or toughened safety glass. Glass panes shall be of a thickness required by the USCG and classification society rules but in no case less than 3/8" thick on the forward house windows and 3/16" thick elsewhere. All passenger space windows shall be fixed.

The CONTR shall integrate the sizing, layout, and design of Pilothouse windows with the Pilothouse and console arrangement described in Section 401. Visibility for the crew during Vessel operations shall be enhanced to the greatest extent possible by minimizing the size of the mullions and quantity of forward-facing Pilothouse windows. The center Pilothouse window shall be as large as possible. Windows in the Pilothouse shall be fixed except that one window on each wing station shall be a horizontal sliding window.

Forward Pilothouse windows shall be fitted with adjustable, robust, marine grade Mylar shades in guided tracks.

Provide windows or CCTV on the aft Pilothouse bulkhead for visibility aft either to the stern, or into the upper passenger cabin spaces, as applicable. The aft Pilothouse windows shall be provided with window treatments (blinds) wherever passengers could potentially see into the Pilothouse. Window treatments shall be fully integrated with the Vessel's interior decor.

Windows shall be tinted to the satisfaction of the OWNER. Pilothouse windows shall not be tinted. Windows shall be shaped to suit the superstructure. Space between clear openings shall not exceed 4-1/2".

Pilothouse windows shall be installed at an angle to minimize glare and reflections.

Window designs and installations shall allow for a two (2) hour window replacement time.

The CONTR shall minimize the number of different, individual window sizes installed on the Vessel.

626 WINDOW WIPERS

The Pilothouse window wipers shall be installed for all forward facing windows. The wipers shall cover the entire rain swept area of visibility clearing at least eighty percent (80%) of the window area. The wipers shall be Wynn Type D, Mk-V or approved equal, linear style, with variable solid-state speed control. The wipers shall have an auto-parking feature that does not obscure the window in the parked position. Quiet wiper operation is essential, the CONTR shall be responsible for ensuring that noise from operating wipers is minimized. See Section 088 for noise limits.

A fresh water window washer system shall be provided with water supplied from the Vessel's fresh water system. There shall be a single solenoid for all windows. The location of any isolation valves and/or solenoid valves shall not be where they can drip on sensitive pilot house electronics. When the valves/solenoid leak they shall leak onto a non-vital area with no electrical components and still be visible to the crew.

631 PAINT & COATINGS

The CONTR shall propose a recognized marine paint manufacturer to the OWNER for approval. The paint formulation, specification, surface preparation, environmental constraints and application, shall be in accordance with that manufacturer's recommendation and warranties. The CONTR shall provide a complete painting schedule to the OWNER for approval. Upon receipt of the OWNER's approval, painting system applications may begin. All coating systems shall be legal in the State of California.

The CONTR's Painting Schedule shall be reviewed and approved by the paint vendor(s) before it is submitted to the OWNER for approval. The Paint Schedule shall include information pertaining to paint formulation, surface preparation and cleaning, environmental constraints, and application techniques and tolerances.

Paint performance, including but not limited to anti-fouling performance, shall be fully warranted by the CONTR.

INTERIOR COATINGS

The Pilothouse interior shall be flat black. The console shall be meticulously covered to prevent damage prior to delivery.

The Interior joinery of the vessel shall be constructed of honeycomb aluminum panels with HPL laminate, decorative metal finishes or microperforated aluminum sheet as required by the location of installation. The honeycomb joinery system shall be Ayres Ayrlite panels Made in the USA. The system shall be constructed using the approved Ayers aluminum extrusions, panels, assembly accessories and techniques best suited for each application. Where multiple options exist on how to connect, support, retain or finish panels the most robust method and materials shall be chosen to complete the detail. Standard details for construction shall be developed by the CONTR for review and approved by the OWNER prior to construction. All panel finishes (both sides) shall be approved by the OWNER prior to ordering any interior materials. All finishes shall be reviewed and approved for compliance with the standard WETA interior finishes and the area of application. All laminates shall be high quality and readily available. All adhesives used in honeycomb panel fabrication shall be approved by Ayres and the OWNER. The interior design shall strike a balance between light weight and a durable system suitable for years of heavy passenger service. The OWNER shall approve all panel scantlings to ensure that a suitable balance has been met. The OWNER reserves the right to consult with the manufacturer, require calculations and/or a full-size mockup if required to prove the suitability of scantlings, assembly techniques and accessories used.

EXTERIOR COATINGS

A representative exterior painting color scheme with logos and branding is provided for reference in Appendix B. The CONTR shall provide a final color scheme tailored to their Vessel configuration to the OWNER for approval within ninety (90) days of agreement award.

Exterior areas of the superstructure not exposed to view shall be left unpainted such as any removable tunnel top cladding between hulls, the inside of bulwarks, undersides of roof structures, and handrails. The CONTR shall determine all such areas with OWNER’s approval prior to painting. The inboard tunnel walls of the hull shall be painted due to recent corrosion problems with 5083 alloys in this environment.

Colors on multiple coats of epoxy primer shall be of a differing shade.

The CONTR shall exercise care in the painting of the bow and bulwarks to avoid glare and reflection into the Pilothouse. Gloss finishes on these surfaces shall be avoided.

The CONTR shall coat the inner surface of all hull penetrations with a proven marine epoxy coating system such as Blueseal or equal. Hull penetrations to be coated include, but may not be limited to, thru-hull piping connections, stern tubes and seachests. The epoxy coating system shall be applied to the entire interior surface of each hull penetration as shown in Appendix B. The Blue Seal or Amercoat 140 shall be applied over everything while the Intersleek shall only be applied to the interior of the pipe and not over the face of the flange.

Paint thickness and type shall be in general accordance with Table 631-1. In all cases, the application method, thicknesses, and recoating schedule must follow the coating manufacturer’s requirements.

Table 631-1 – Vessel Coatings			
Location	**Coating System**	**DFT (mils)**	**Color**
Hull - waterline to keel, 6" boot stripe	Sandblast to achieve manufacturers required profile	-	-
	Epoxy primer	5-6 mils	Black
	Epoxy primer	5-6 mils	Light Gray
	Antifouling (Intersleek)	5 mils	Red
	Antifouling (Intersleek)	5 mils	Black
Hull - waterline to sheer and guard rails, House, and Bulwarks	Sandblast to achieve manufacturers required profile	-	-
	Epoxy primer	4-5 mils	Buff
	Polysiloxane Topcoat	3-4 mils	White
Weather Decks, Hull tops where accessible. Where hull tops cannot be accessed provide the primer coat only	Sandblast to achieve manufacturers required profile	-	-
	Epoxy primer	3-4 mils	Buff
	Pacific Polymers Elastodeck 5001	6-8 mils	Medium Gray
	Broadcast non-skid additive	-	-
	Polysiloxane Topcoat	3-4 mils	Medium Gray
Exterior house overheads, inner bulwarks, non-exposed areas	Refer to Section 631	-	-
Machinery, main engines, gears and gensets	OEM epoxy coatings, white	-	-
Hull Penetrations	Mechanically achieve manufacturers required profile	2-3 mils	-
	Blue Seal - Filler coats (as required)	10 mils	Blue or Grey
	Blue Seal - Top coat	10 mils	Blue or Grey
	Antifouling (Intersleek)	5 mils	Red
	Antifouling (Intersleek)	5 mils	Black

631.1 PAINT & COATINGS OPTION

The CONTR shall propose an alternate coating schedule for the hull and super structure based on a premium Polyurethane based coating system. The coating schedule shall be as per the manufacturer based on the aluminum substrate and a commercial application. The CONTR shall provide with their bid an alternate coating schedule for all above waterline surfaces aside from decks that will remain as directed in the 631 section. The alternate coating schedule shall not include any fairing compound or other yacht level application details other than the high gloss extremely durable premium polyurethane-based coating system that the OWNER is looking for. All final details of the coating system shall be reviewed and approved by the manufacture and the OWNER prior to the applications of any coatings should this option be exercised.

The price for this option will be input into the option items table of the schedule of values form in Part D. The price input will be the additional amount above the regular 631 line item in the schedule values to coat the vessel with the premium polyurethane-based coating system as detailed above. As an example, if the cost of the regular 631 line item was $100 and total cost of the coating systems with the 631.1 optional polyurethane system was $150 then the line item in the optional items table of the schedule of values form in Part D would be $50.

633 CATHODIC PROTECTION

The vessel shall be fitted with passive zinc Mil spec anode-type protection system. Bolt-on passive anodes shall be provided on the hull bottoms, and at each main engine seachest in sufficient numbers, locations and weight to protect the hull for 2 ½ years. The CONTR shall provide the services of an ABYC certified specialist qualified to design the system and then to measure and provide a report of adequacy when the Vessel is afloat.

All hull anodes shall be mounted with Fraser Bronze cast round aluminum/sst hull mounts as per Fraser drawing No. FR 072.0.

Cathodic protection meters shall be installed on the Bridge to allow for assessment of each of the hulls' potential by the operators. The meters shall be Electro-Guard Model 125A meters, one for each hull with a reference cell located aft near the cathodic load in a location that will always be well submerged. The reference cells shall be mounted inside of cofferdams fabricated from pipe and standard flanges. The cofferdam shall preclude the possibility of reference failure from flooding the compartment it is located in. The closure flange of the cofferdam shall be tapped and a ¼” NPT 316sst ball valve installed where it is protected so that the cofferdam can be checked for flooding prior to opening. The protection shall make it such that crew cannot accidentally step on the valve and break it off.

Unless otherwise noted, all hardware and fasteners used in the construction of the Vessel shall be 316 stainless steel.

ISOLATION OF DISSIMILAR METALS

The assembly of dissimilar metals throughout the Vessel shall be in accordance with good shipbuilding practices and all regulatory requirements. Corrosion and Coatings Prevention in the ABS Rules for Building and Classing Aluminum Vessels shall be followed without exception.

Copper tubing is not permitted in sea water systems, and copper nickel piping shall be isolated from hull fittings. Water systems shall be constructed using the same material for piping and fittings throughout the system. Steel and other non-aluminum metal fittings shall be isolated from the aluminum structure at their mounting surfaces by means of 10 mil PVC tape or other approved methods. Isolate stainless steel from aluminum using isolation kits and products such as TEF-GEL in areas where direct contact cannot be avoided.

Pumps in sea water systems shall be corrosion resistant and approved by OWNER.

634 DECK COVERING

Deck coverings shall not be applied until production work, especially welding, has been substantially completed. The decks shall be smooth and fair when deck coverings are applied. All decks shall be bare and unpainted except as noted in Table 634-1.

Table 634-1 – Deck Covering

Location	Type
Weather Decks	See Table 633-1 for non-skid.
Pilothouse	Carpet per Appendix B.
Passenger Spaces	Carpeted throughout in accordance with Appendix B with a carpet cove base that meets ADA requirements of Section 10.1. Install slip resistant FORBO vinyl flooring or equal mats just inside all passenger boarding areas per OWNER layout and direction.
Stairways	Full tread WOOSTER PRODUCTS STAIRMASTER treads, safety yellow at top and bottom stair.
Restrooms & Commissary Spaces, Bow Door	Epoxy poured flooring system in accordance with Appendix B, minimum 3” coving onto all bulkheads.

Full width and depth safety treads shall be fitted on all stairs, safety yellow at top and bottom stair. Stair treads shall not present tripping hazards wherever installed.

Rubber matting shall be provided for the Pilothouse and installed in way of ship service switchboards and other electrical equipment. Matting installed in way of electrical equipment shall conform to MIL SPEC #M-15562F Type III for dielectric properties.

The selection of deck covering materials and colors shall take into account the durability, cleanability, and maintainability of such materials. The materials and colors proposed by the CONTR shall account for the fact that many areas of the Vessel will be subject to heavy foot traffic. Materials shall be selected based on their ability to hide such heavy use, yet the materials must present a pleasing appearance and contribute to the overall decor. Another factor that shall be considered in the selection and installation methods of these materials is the ease of future replacement as the deck coverings wear out over time.

After installation of finished decks, they shall be immediately and completely covered with plywood runners and cardboard protection through completion of the delivery voyage in order to protect the finishes.

635 INSULATION

Insulation shall be provided in all exterior bulkheads, joiner doors, and overheads with a suitable vapor barrier on the occupied side of the insulation. Care shall be taken to ensure the integrity of this barrier.

Acoustic insulation shall be installed in the engine rooms and shall be effective so as to limit sound to levels indicated in Section 088. The manufacturer's recommended methods shall be used for installation of the insulation. Sound leaks at doors and other openings shall be sealed to provide an acoustic sound barrier.

Machinery space insulation shall be lined with sheet metal (no perforations). The finished surface shall be designed and installed for protection of the underlying insulation and ease of cleaning.

All insulation IWO of the tight sides of the engines shall be as thin as possible. The CONTR shall choose the Structural Fire Protection (SFP) that offers best access for maintenance. Where maintenance access is impacted thicker SFP may be used and in areas of critical importance, such as the frame flanges on the tight sides of the engines the thinnest SFP should be used. As an example, Promaguard from Promat has been touted as meeting A60 for aluminum structures in 2each 10mm layers for a total thickness of 20mm. Materials such as these, provided they are USCG approved for SFP and meeting the requirements of the fire boundaries shall be used where maintenance access is critical.

Mild steel or galvanized pins shall not be used for installation of insulation. Use stick on or welded bi-metallic stainless-steel pins and stainless-steel clips. All points of insulation pins shall be cut down to dull ends to ensure the crew and maintenance staff are not punctured by pins. Sharp points left on insulation pins will pierce the protective caps and injure crew and maintenance staff. Particular attention of insultation pin details shall be pained IWO of the tight side of the engines as staff routinely will be pressed up against these areas.

Structural fire protection must be fitted throughout the Vessel in accordance with USCG requirements as specified in 46 CFR.

Engine exhausts shall be lagged per Section 259.

644 SANITARY SPACES & FIXTURES

There shall be a minimum of two (2) unisex restrooms installed on the vessel. Both restrooms shall be outfitted to meet all requirements for the accommodation of the mobility impaired (ADA). All restrooms shall be accessible only from the Vessel interior. Restrooms shall be outfitted as follows with the WETA standard items designated in Appendix B:

- Fresh water flush head, with remote mounted flushing.
- One single stainless steel sink and faucet.
- Mirror.
- Liquid soap dispenser.
- Paper towel dispenser.
- Hand dryer.
- Floor drain.
- Overhead light.
- Power ventilation.
- Waste receptacle with lid.
- Coat hook.
- Baby change station (in ADA head).

645 INTERIOR OUTFITTING

COLOR BOARDS

The CONTR shall provide the services of an experienced marine interior designer to coordinate the interior color scheme and finishes. The interior designer shall utilize WETA standard interior outfitting details, Appendix B, in order to prepare for the OWNER's approval, three (3) unique color board themes tailored to the final configuration of the vessel. These themes shall show the arrangement of furniture and colors with actual samples of the materials to be used for the seating, tables, commissary space, deck covering, bulkheads, paint, glass, doors, and window treatments.

FURNITURE AND FURNISHINGS

The details in Appendix B are provided to simplify the process of material selection for interior outfitting components and colors. If the CONTR has to choose a material that is not in Appendix B it shall be reviewed and approved by the OWNER assuming the deviation from Appendix B is justified. The selection of furniture, furnishings, and upholstery materials and colors shall take into account the durability, cleanability, and maintainability of such materials. The materials and colors proposed by the CONTR/CONTR shall account for the fact that many areas of the Vessel will be subject to heavy use. Materials shall be selected based on their ability to hide such heavy use, yet the materials must present a pleasing appearance, maximize passenger comfort, and contribute to the overall decor. Another factor that shall be considered in the selection and installation methods of furniture, furnishings, and upholstery materials is the ease of future replacement as these items wear out over time.

A mixture of seating styles and arrangements similar to existing WETA vessels is preferred.

SEATS

Provide at least the threshold number of interior and exterior seating as shown in Table 081-1. Interior cabin seating not located with fixed tables shall have drink holders, except for those seats adjacent to aisleways.

Interior seats shall be of a high quality high back design. Interior seat cushions shall be easily replaceable and constructed of materials that are suitable for a minimum of ten (10) years of service without fading or wearing. All seating shall comply with the WETA standards for interior outfitting details in Appendix B.

Removable interior seat covers are not desired, and the seat should not require covers in order to meet the ten (10) year service life.

Exterior seats shall be of aluminum construction with a corrosion resistant anodized or powder coated finish.

Seats shall be installed using welded seat tracks.

Seat spacing shall be per Appendix B and shall satisfy regulatory requirements.

TABLES

Tables shall be track mounted with aluminum frames similar to those of the seats. Tops shall be aluminum honeycomb panel construction with plastic laminate finish and sea rails with cutouts for cleaning. Dimensions, numbers, and locations similar to OWNER’s existing vessels.

METAL CASE FURNITURE

Case goods (desks, cabinets, etc.) shall be of aluminum. The gauges of aluminum shall be heavy enough to provide the necessary degree of strength and stability for marine use.

Drawers and drawer guides shall be constructed so as to operate freely and without noise. All drawers and doors shall have catches with rated strength such that they will remain closed when tilted thirty degrees from horizontal, but drawers shall be removable at will. Drawers shall have side glides and positive stops to prevent accidental opening.

Doors and drawer heads in metal furniture shall be of vermin proof sealed box construction, braced with proper reinforcements to prevent undue racking or twisting. Doors shall be equipped with rubber bumpers to prevent rattling.

GENERAL WALL DECOR

Bulkheads in all enclosed passenger areas shall be finished in compliance with WETA standard details of Appendix B. Flooring shall be extended upwards a minimum of 4" from decking on all bulkheads.

HARDWARE

Coat hooks (MCMASTER-CARR #12845A21, stainless steel) shall be fitted with tamper proof screws, and located at least 72" above the deck, as follows:

- Four (4) in the Pilothouse.
- Forty (40) on the enclosed passenger deck(s).
- Two (2) installed in each passenger restroom.

651 COMMISSARY SPACES

Construction of all commissary units shall be closely coordinated in order to facilitate installation of special equipment.

The snack bar/kiosk counter top shall be designed and sized to provide access for the mobility impaired. Specifically, there shall be a section of the bar with an ADA compliant counter height to accommodate wheelchair patrons. See the requirements as set forth in Section 092.

All commissary equipment shall be securely mounted and fastened to bulkheads, decks, or countertops. Mountings shall be designed and installed to withstand acceleration forces equal to four (4) times the acceleration due to gravity.

The CONTR shall provide sufficient electrical circuits and outlets in the commissary space to serve all appliances and equipment at their intended design locations. The CONTR shall also provide at least two (2) spare outlets in the Snack Bar. The CONTR shall provide plumbing service to support the installation of all equipment.

As part of their Technical Proposals, CONTR shall submit a complete list of all commissary equipment to the OWNER for review.

SNACK BAR

The CONTR shall provide a complete combined beverage and snack bar service on the lower passenger deck. The layout and arrangement of the Snack Bar shall follow the general guidance provided in WETA standard details, Appendix B.

The service shall be adequate in every respect for the convenient and proper service to passengers and crew. The equipment shall be suitable for marine use (i.e., pot metal, nickel-plated steel, and similar low quality items of outfit shall not be used), and shall be of the latest design for the type of service to be rendered. The Snack Bar shall contain, at a minimum, the equipment contained in Table 651-1 and be configured in general accordance with the following requirements:

The Snack Bar shall be located adjacent to the Utility Storage Space described in Section 654 with direct access provided via a lockable door.

The customer accessible exterior surfaces and countertops of the Snack Bar shall have laminate surfaces. All exposed interior surfaces, underside of the bar top, sinks, and double-walled ice basin shall be stainless steel. The design and installation of the snack bar counter tops shall ensure that there are no gaps. The intention of this statement is that there are not small gaps between elements or to the back splash that solids or liquids can get into. In the past vessels with gaps in the snack bar counter tops accumulated liquids and solids in these voids that created cleanliness and corrosion issues.

The snack bar installation shall account for the routing of the soda hose bundle from the locker to the cold plate in the ice bin and to the soda gun. The soda gun shall be mounted in an area that does in impact snack bar operations using a standard Glasstender undercounter gun holder. Refer to Appendix B, these specifications and detailed ship checks of the Hydrus class vessels for standard arrangements of WETA snack bars. All final details of the snack bar arrangement shall be determined in the detailed design and engineering phase as reviewed and approved by the OWNER.

Table 651-1 – Snack Bar Equipment, Details in Appendix B	
Display case	Refrigerated, Glass 2 door
Beverage system	Provide a sealed locker with plumbed drain, filtered water supply with shut off valve, rack for five (5) syrup boxes, CO2 bottle rack and carbonator shelf with power outlet, 4" PVC chase to the Snack Bar ice bin. OWNER to provide soda mix system.
Double brewing station	Two pot brewing station, 208VAC
Refrigerator	Undercounter
Sink – Primary	Three (3) compartment stainless steel sink with integral drain boards complete with faucets.
Sink – Hand Washing	One (1) compartment stainless steel sink complete with faucet, soap and towel dispenser, meeting hand wash station requirements.
Ice Bin	Covered with integral cold plate for connection to soda system, one (1) 40" speed rail.
Microwave Oven	High quality stainless steel with carousel.
Cashier Stand	Located at the bar with a power receptacle. This area shall be equipped with the OWNER furnished cash register, and have storage for schedules and other paper items.
Cabinets	Stainless steel lockable cabinets with sufficient storage for intended use.
Cup Dispensers	Various sizes to suit WETA std cups, 6-8ea

All Snack Bar equipment shall be UL listed and National Sanitation Federation (NSF) approved.

TICKETING STATION

The CONTR shall provide a dedicated Ticketing Station on the main interior passenger deck in accordance with the standard details in Appendix B. The Ticket Station will be attended by a crewmember during and immediately after boarding for direct ticket sales. The Ticketing Station presents a significant traffic flow and passenger congestion challenge during boarding and shall be arranged to accommodate approximately thirty (30) passengers queuing for tickets without impacting the boarding process.

The Ticketing Stations shall consist of an integrated desk, with 110-volt outlet, PA mic jack, Aiphone, coat hooks and dedicated seating for one (1) crewmember. Ticket processing equipment will be furnished by the OWNER and integrated by the CONTR.

654 UTILITY SPACES

The following utility spaces with shelves, bins, and racks, arranged to suit and provide secure underway stowage of material and equipment to be stowed, and with scantlings adequate to support the loads imposed, shall be provided within the Vessel:

- Storeroom, totaling at least 400 ft3, adjacent to the Snack Bar for secure stowage of snack bar items. Storeroom shall be sheet metal lined and fitted out with METRO shelving. The CONTR shall provide METRO shelving as required to complete the commissary spaces and storerooms to the satisfaction of the OWNER. All shelving shall be securely mounted to bulkheads, overheads or decks as appropriate. The Utility Storage Space will be used for storage of all normally carried foodstuffs, supplies, portable equipment and utensils etc.

656 TRASH DISPOSAL SPACES

The CONTR shall provide stainless steel or aluminum trash receptacles. Trash receptacles shall be provided in pairs with separate receptacles for:

- General waste.
- Recycling newspapers, aluminum cans, plastics.

A total of six (6) pairs, fifteen (15)-gallon capacity or greater receptacles shall be provided to service interior and exterior passenger and crew areas. Interior stowage receptacles shall be fabricated from aluminum honey comb and exterior receptacles shall be fabricated from stainless steel if fully exposed to weather.

671 LOCKERS & SPECIAL STOWAGE

The Vessel arrangement shall include provisions for stowing at least four (4) strollers and six (6) pieces of large luggage concurrently. Stroller parking shall have adjacent passenger seating and be either integrated with or in close proximity to the main seating area.

Key Box, a twenty-four (24) key lock box shall be provided in the Pilothouse. The lock box shall be made from steel or aluminum with a hinged key lockable door. The key box shall be permanently mounted in a location as directed by the OWNER.

The CONTR shall provide the following storage lockers:

CREW LOCKERS

- Four (4) each double tiered lockers for the crew shall be provided.
  The lockers shall be 18" wide by 24" deep with a hanging bar and one (1) shelf.
- Cleaning Gear Locker (Main Deck)
- Mop, broom and vacuum storage.
- Mop sink
- Shelving.
- Complete with recommended cleaning equipment.
- Deck drain

EMERGENCY GEAR LOCKER (MAIN DECK)

- Emergency and rescue equipment.
- Additional lifesaving equipment.

DECK (BOSUN'S) LOCKER

- Storage for deck items.
- Spare mooring lines, bunting, and other deck equipment.
- Fabricated aluminum or deck mounted fiberglass boxes, reviewed and approved by OWNER

672 BICYCLE ACCESS AND STOWAGE

The CONTR shall provide permanent bicycle access and stowage racks on the boarding deck to accept the quantity of bicycles called out in Table 081-1.

Bicycle storage shall be protected from the elements, particularly salt spray. The loading and offloading of bicycles shall be accomplished without having to transit the main passenger cabin and seating area. Bicycle storage facilities shall be arranged to promote efficient traffic flow and minimize congestion during loading and offloading. Racks shall be designed to accommodate commuter, road and mountain style bicycles.

Bicycle storage shall generally be horizontal racks that secure the bicycle's wheel(s) requiring a minimal vertical lifting effort by the passenger. Alternate arrangements such as hanging storage may be considered.

800 MANAGEMENT AND ENGINEERING

The CONTR shall supply all necessary labor, materials, services and engineering required to provide all project management and engineering functions contained in these Technical Specifications ("the Specification") and as otherwise required by the RFP. All aspects of the engineering effort that will take place in the detailed design and engineering phase of the project shall be completed by an engineering firm as proposed by the CONTR and approved by the OWNER. The engineering firm proposed by the CONTR shall be required to have recent experience with high speed lightweight ferry boats of similar size and complexity to the vessels being proposed.

810 DESIGN & ENGINEERING

The CONTR shall provide an initial Concept Design, demonstrating compliance with the OWNER's requirements, that includes at least the following information:

- Speed vs. Power Curves.
- Predicted Fuel Consumption Curve.
- The chosen hull form, explaining windage and maneuverability characteristics.
- Wake wash prediction.
- Exhaust emissions prediction.
- Trim & Stability Booklet.
- General Arrangement drawing.
    - Deck layout.
    - Cabin layout.
    - Seating Plan (include make and model number of all seats and tables).
    - Boarding facilities.
    - ADA facilities showing aisle widths, wheelchair tie down locations, wheelchair accessible heads.
- Inboard Profile.
- Midship section.
- Machinery Arrangement including engines, gears, propulsion shaftline, and jets.
- Bridge layout with lines of sight.

Following OWNER's acceptance of the Concept Design proposal, the CONTR shall provide all Contract Design, Detail Design and Production level engineering services necessary for the work in accordance with the Specification. Services shall include technical calculations, surveys, material selection, preparation of diagrams, sketches, schedules, data, and preparation of all production drawings and as-built drawings.

All drawings shall conform to a mutually agreeable Ship Work Breakdown Structure (SWBS) numbering system. All drawings shall be submitted in electronic format as AutoCAD® .dwg and Adobe® Acrobat .pdf version of the AutoCAD files. Scanned drawings with hand mark ups submitted, as .pdf files will not be acceptable. The .pdf file format is only to be used for viewing of CAD drawings. Booklets of details and calculations may be on sheets sized 11" x 17" or 8 ½" x 11".

Drawings shall incorporate the Standard WETA details contained in Appendix B of this specification, where applicable.

All data created for this project shall be provided to and reviewed by the OWNER, including all information provided to USCG. During the design phases, drawings shall be reviewed on a weekly basis at a weekly web meeting organized by the CONTR. The CONTR shall include all personnel deemed necessary for the meeting, and any others requested by the OWNER. The CONTR shall be responsible for taking meeting minutes and emailing a brief synopsis of each meeting, including all decisions made and any action items, to the OWNER.

Drawings shall include a Bill of Materials (BOM) of all major components defined in the drawing. Raw materials such as plate, extrusions, pipe, pipe fittings, hoses and hose end fittings shall be called out in the drawing or in an attached material schedule. All drawings shall show enough detail, including material schedules, such that the system can be recreated from the drawings. Symbols on drawings shall conform to recognized marine commercial standards. Materials shown on drawings shall have item numbers and be identified in a material list by material specifications, ASTM, ANSI, NEMA, etc., as appropriate.

The OWNER will review and approve the CONTRs detailed production level drawings to determine compliance with the Specification and Contract. The OWNER's review will not relieve the CONTR of responsibility for deviations from the Specification unless specific written approvals of deviations are received by the CONTR with the final approval of the drawing by the OWNER. Approval of a drawing does not constitute approval of a deviation, mistake, or omission. OWNER approval of a deviation from the Specification will not relieve the CONTR of the responsibility for satisfactory operation of the system or equipment. Work performed by the CONTR prior to the OWNER's review and approval of the CONTR's drawings will be at the CONTR's own risk.

Schematics shall be used to convey a system theory of operation and design. However, the CONTR shall not build from drawings that are schematical in nature except for electrical and electronics drawings. The CONTR shall build from production drawings that show production level details including but not limited to foundations, hangers, brackets, supports, removal clearances, routing and other details required to ensure the elements of the drawing get installed as per the approved drawing.

All drawings shall be initialed in the title block by the drafter and the engineer responsible for the production level drawings prior to submittal to the OWNER. They shall be signed by the engineer and supervising engineer checking the drawing. Each drawing shall be checked and finished before submitting to the OWNER for final review. Concept or progress reviews of drawings are encouraged, but the status of the drawing must be made clear to the OWNER prior to review. Drawings without appropriate signatures and drawings which are not complete will not be reviewed by the OWNER for anything other than concept approval and will be returned to the CONTR for completion. Returned drawing submittals do not count towards fulfilling the CONTR's obligations with regard to scheduling; i.e., all returned drawings must be resubmitted complete within the scheduled time.

The CONTR shall propose to the OWNER a plan for determining the stability of the vessel, building on the Preliminary Trim & Stability Booklet submitted as part of the bid. This plan shall detail the process that the CONTR will follow in obtaining USCG approval of the final Trim & Stability Booklet and issuance of a USCG Stability Letter. The CONTR shall submit a Final Trim & Stability Booklet for OWNER review ten (10) days after vessel launch.

Stability Letters shall be framed and posted in the pilothouse as required by USCG.

The CONTR shall furnish a copy of all written or email correspondence sent to or received from regulatory agencies to the OWNER. When submitting system production level drawings, such as piping diagrams and isometric wiring diagrams, CONTR shall include the calculations by which the system components were sized. The OWNER will not review these drawings without supporting calculations.

AS-BUILT DRAWINGS

All working drawings are to conform to an “as-built” condition and stamped “AS-BUILT FINAL” in the title block. The final drawings shall reflect systems and arrangements of the Vessel as finally completed and approved. The drawings shall not be stamped “AS-BUILT FINAL” until after the CONTR has verified that the physical configuration of the Vessel matches the drawing being submitted as an as-built. Close attention shall be paid to electrical and piping termination details. The CONTR shall verify that equipment data matches the drawing BOMs.

DISPLAY DRAWINGS

The CONTR shall develop and provide 24”x36” D sheet size, non-fading positive prints of drawings to be mounted in the locations as required by the USCG on board the Vessel. Any plans required by the USCG for issuance of the COI shall also be provided by the CONTR. These drawings shall be mounted in anodized aluminum, or stainless steel, frames with clear plastic covers (“Plexiglass”) prior to delivery of the Vessel.

WEIGHT CONTROL PROGRAM

Minimizing weight growth during the contract work is important. Scantling sizes shall be kept to a reasonable size. All systems shall be designed to balance the weight of the Vessel versus the long-term durability of the Vessel.

The CONTR shall prepare and maintain a Builder’s Weight Estimate (BWE). Each revision of the BWE shall be submitted to the OWNER. The weight estimate shall conform to the agreed SWBS system. Throughout the construction period, the CONTR shall monitor the actual weight of equipment and materials against the BWE. The BWE shall be updated and resubmitted monthly. Weight growth or migration shall be brought to the attention of the OWNER in writing.

SERVICE LIFE MARGIN

The CONTR shall incorporate a Service Life Margin into the Vessel design. The Service Life Margin is an allowance for future growth of the Vessel during its operational life. This margin shall be intact when the Vessel is delivered to the OWNER. As a minimum the CONTR shall include a service life margin of 4,480 pounds (2 long tons) and a contract modification margin of 2,240 pounds (1 long ton). The centers of these weights shall be assumed to be at the vessel’s Longitudinal Center of Gravity and 4' above the main deck.

820 TECHNICAL DOCUMENTS

As part of the complete Vessel, the CONTR shall provide to the OWNER, upon delivery:

- A complete set of the USCG approved drawings for the Vessel.
- A complete set of all As-Built drawings for the Vessel. Three (3) full-sized black and white reproducible copies and an identical AutoCAD (Latest Release) copy on CD-ROM.
- Smaller drawings, such as 8 ½" x 11", and 11" x 17", shall be on bond paper.
- Manufacturer’s drawings and schematics – minimum three (3) copies of each document.
- Vendor and subcontractor drawings – minimum three (3) copies of each document.
- Machinery, equipment, and parts: manuals and technical documentation – minimum three (3) copies of each document and one copy on CD-ROM.

- Vessel operations manual, specifically procedures to operate shipyard custom built and interfaced systems including machinery, controls, auxiliary, electrical, plumbing and safety – minimum three (3) copies.
- One copy of all purchase orders. The purchase orders shall be grouped by SWBS section. The intention is that the OWNER shall have all of the information required to contact vendors, order spares, operate and repair the Vessel.

830 MATERIALS

CONTROL OF MATERIALS

The materials used on the work shall meet all requirements of these technical specifications.

Materials to be supplied shall be identified in the CONTR-developed documents such as: specifications, purchase technical specifications, drawing BOMs, drawing equipment lists, or detail drawings. Materials shall be described to the extent required for ordering or reordering from suppliers. Descriptions shall include brand name, model, type, size and other information as applicable to the item.

Where necessary to provide flexibility and competition in the purchasing process, alternative manufacturers may be suggested by CONTR and are subject to approval by the OWNER.

No materials shall be ordered until after Notice to Proceed has been authorized by the OWNER. Any materials ordered prior to such notice to proceed are at the CONTR's sole risk.

All materials incorporated in the Work covered by this Contract are to be new, of current production, of the specified or most suitable grade of their respective kinds for the purpose and, except where otherwise specifically provided for in the Contract for particular items, currently supported by spare parts in the United States of America and as required by the Contract. All material items used shall be suitable for use in a marine environment and for their intended use.

All materials shall be free from imperfections of manufacture and from defects that adversely affect appearance or serviceability.

Materials banned by the State of California shall not be used under this Contract.

Structural plates, shapes, bars, castings, forgings and all other material used throughout the Vessel which are subject to Regulatory Body approval shall meet the requirements of the Regulatory Bodies.

SAMPLES

Samples of materials shall be submitted for approval when so directed by the OWNER or indicated in the Contract Documents. The OWNER may order such sampling at their sole discretion. Any work in which untested materials are used after such direction from the OWNER, and which the OWNER has not approved in writing, is subject to removal at the OWNER's direction and at the CONTR's expense.

Material samples may, at the option of the OWNER or Regulatory Bodies, be subjected to laboratory testing beyond that normally performed by the manufacturer, to verify compliance with quality requirements. The results of the tests may be the basis for acceptance of quality of manufactured lots. Except where such testing is expressly required by the Contract, the costs of laboratory testing that is requested by the OWNER and beyond that normally performed by the manufacturer shall be paid for by the OWNER as Extra Work at the laboratory facility's invoiced price and without CONTR mark-up.

TESTS AND INSPECTIONS AT PLACE OF MANUFACTURE, PRODUCTION OR SHIPMENT

In addition to material tests and inspections that occur at the CONTR's facilities, certain items of equipment and other materials shall be inspected and/or tested at the source (place of manufacture, production or shipment) as required by the Regulatory Bodies and the Contract. During the monthly Progress Meetings CONTR shall apprise the OWNER of anticipated tests that may occur in the following month that the OWNER may desire to witness including similar propulsion component testing.

Where inspections and tests at the place of manufacture, production or shipment are made, the following conditions shall be met. The conditions in subparagraphs 'A' and 'B' below shall be requirements of any Contract or agreement between the CONTR and the producer, manufacturer, fabricator or supplier:

A. The OWNER and Regulatory Body representatives shall have the cooperation of the CONTR and the producer, manufacturer, fabricator or supplier with whom the CONTR has contracted for the materials.
B. The OWNER and Regulatory Body representatives shall have full entry at all times to such parts of the plant as may concern the production, manufacture, assembly, cleaning, painting and packaging of similar materials being furnished.
C. In the case of plant facilities located within the continental United States, the OWNER shall be advised of the production and/or fabrication schedule a minimum of 4 calendar days prior to beginning work on any similar item requiring test or inspection. In the case of plant facilities located outside the continental United States, the OWNER shall be advised of the production and/or fabrication schedule a minimum of 10 calendar days prior to beginning work on any similar item requiring test or inspection. Such notifications shall include the recommended dates that the OWNER be on site to witness or perform tests and inspections.
D. Planning and coordinating the conducting and witnessing of tests and inspections at sources of supply by Regulatory Body representatives shall be the responsibility of the CONTR.

All materials that are fabricated or installed without having received the required inspections and tests witness thereof by Regulatory Body representatives, shall be considered unacceptable and may, at the OWNER's discretion, be subject to removal and correction at the CONTR's expense.

The OWNER reserves the right to retest materials that have been tested at the source of supply, after they have been delivered and prior to incorporation into the work where, damage warrants such retest. The OWNER reserves the right to reject all materials which, when retested, do not meet the requirements of the Contract.

MATERIAL CERTIFICATION

Where materials are required by these specifications to conform to certain standards and requirements, such as those of the USCG, ASTM, AISI, ANSI, FCC, USPHS, or UL, the following provisions shall apply:

A. All items requiring U.S. Coast Guard approval shall be listed in COMDTINST M16714.3 (old CG-190), "Equipment Lists," or a USCG approval letter or certificate shall be furnished to the OWNER upon request.
B. Copies of materials certifications, test reports, metal analyses, welding inspections, non-destructive test data, welding procedures and test schedules shall be provided to the OWNER as requested.
C. The OWNER may permit the use, prior to or without sampling and testing, of certain materials or assemblies when accompanied by the manufacturer's certificate of compliance stating that such materials or assemblies fully comply with the requirements of these specifications. The certificate shall be signed by the manufacturer. Each lot of such materials or assemblies delivered to the work must be accompanied by a certificate of compliance in which the lot is clearly identified.

D. Provision of invoices, certificates of compliance or other documentation contending that furnished materials comply with standards and other requirements applicable to the materials shall not relieve the CONTR of his responsibility to perform inspections, tests, research or other validation work necessary to ensure that the materials do in fact comply with the requirements.
E. All items requiring classification society approval shall have an approval affidavit furnished to the OWNER prior to installation of the item.

PROTECTION AND STORAGE OF MATERIAL

The CONTR shall be responsible for the protection from the elements, weather, and abuse, of all material intended for use and installed on board the Vessel until the Vessel is delivered to the OWNER in accordance with these specifications.

Due consideration shall be given to the nature of the item during handling and storage. Materials shall be stored out of the weather in a manner that assures the preservation of material quality and fitness for the work.

All finished surfaces shall be protected by appropriate means. Surfaces damaged or marred shall be replaced or repaired by the CONTR to the satisfaction of the OWNER at the CONTR's expense.

The OWNER may reject any material improperly stored or handled.

The OWNER may require that stored materials, even though inspected before storage, be inspected again prior to their use. Stored materials shall be located so as to facilitate their prompt inspection.

OWNER FURNISHED EQUIPMENT AND MATERIAL

The CONTR shall furnish all parts, materials, equipment, tools, or any other items as necessary to complete the contract, except where indicated otherwise.

"OR EQUAL" MATERIAL

Where a specific vendor, brand name and/or model is required by the Contract design package the indicated brand name shall be provided unless OWNER approval of an "or equal" is obtained. To request OWNER approval of an "or equal", the CONTR must submit a written request to the OWNER and shall be obligated to include the following in the request:

A. All relevant data establishing equality or superiority of the product as it relates to:
    a. performance, reliability, maintainability, durability, size, and weight characteristics
    b. requisite regulatory body approvals
    c. availability of parts and service
    d. service history/records of the proposed item
B. Identification of any material variations of the proposed "or equal" from the materials provided and these specifications otherwise addressed by item 'A' above.
C. The warranty of the proposed item.
D. Drawings and sketches of the proposed item, if available.
E. Names, addresses and telephone numbers of firms that have the item in similar service.
F. An analysis of the effect on Vessel's weight, center-of-gravity and stability.
G. A statement that no increase in the Contract Price or time to complete the Work shall result from use of the "or equal". Written quotes from the "specified" and proposed "or equal" vendors shall be provided.
H. Other salient technical data necessary for a comparative analysis.

The CONTR shall make arrangements for the OWNER to view the proposed “or equal” item in use at the CONTR’s site or deliver a sample to the OWNER if requested.

The OWNER shall provide a written determination regarding the request for use of the “or equal”. The OWNER’s determination shall be considered final. For use of an “or equal” to be considered approved, it must have the unambiguous written approval of the OWNER. The OWNER’s approval of an “or equal” allows the CONTR the option of procuring that item or services. In each case where the request is disapproved by the OWNER, the CONTR shall provide the specified vendor or material at no extra cost to the OWNER.

Use of “or equal” items and material substitution shall not be considered without a written request for same, nor shall it be allowed without the OWNER’s written approval.

It shall be the CONTR’s responsibility to design, integrate, test and incorporate the “or equal” item in the work. All costs to the CONTR as a result of the use of the “or equal”, over and above the cost of the originally specified, shall be at the CONTR’s expense. The CONTR shall be entitled to no extension of time associated with the use of an “or equal”. The OWNER shall not be responsible for any delay resulting from a substitution request.

835 DRYDOCKING

Following delivery to the WETA facilities in San Francisco Bay, the CONTR must arrange at its expense for the vessel to be drydocked in the San Francisco Bay area. The drydocking operation shall include having the underwater appendages examined, bottom cleaned, and any damages from delivery repaired. Bottom paint anti-fouling shall be touched up and anodes inspected. Seachests shall be opened for examination and cleaning. The OWNER shall be notified of the time and place of this drydocking and shall inspect the vessel prior to undocking.

The drydocking shall be witnessed by the USCG for the purposes of fulfilling periodic under water inspection requirements.

Docking plans shall be provided with the Vessel. The docking plan shall identify three (3) unique block set arrangements.

All costs associated with this drydocking shall be borne by the CONTR.

836 PRELIMINARY ACCEPTANCE, SURVEY & TRIALS

Prior to Final Acceptance Trials at the OWNER’s location, the CONTR shall conduct a Preliminary Acceptance Survey and Preliminary Acceptance Trials at or near the CONTR’s facilities. The OWNER will issue Preliminary Acceptance when all of the following requirements are fulfilled to the OWNER's satisfaction:

A. Allowing for a small quantity of minor deficiencies (see below), all physical work is completed, with all requisite regulatory approvals, certifications and letters of compliance obtained, and with the Vessel ready for service in full compliance with the Contract to the satisfaction of the OWNER.
B. Service speed requirement as described in Section 081.
C. Fuel consumption specified in the CONTR’s proposal and the tank capacity in Table 081-1.
D. The Vessel shall be thoroughly cleaned in accordance with Section 951 of these provisions to the satisfaction of the OWNER.
E. All shop and installation tests and inspections shall be completed, with results demonstrating compliance with the Contract to the satisfaction of the OWNER.

F. The Preliminary Acceptance Survey described herein is complete, with the results supporting a conclusion by the OWNER that the Vessel is complete, clean, free of deficiencies, and ready for delivery to the OWNER in compliance with the Contract to the satisfaction of the OWNER.
G. All Trials and prerequisite tests shall have been completed, with results demonstrating compliance with the Contract, and approved by the OWNER.
H. Any prerequisite tests to Preliminary Acceptance Trials and/or Preliminary Acceptance is complete, with results demonstrating compliance with the Contract, and approved by the OWNER.
I. Correction of all known deficiencies including deficiencies that develop or are identified after Preliminary Acceptance Trials.

The survey, tests, inspections, requirements and trials referred to in subparagraphs “C” through “I” above shall serve to assist the OWNER in making the determination as to whether the requirements of subparagraphs “A” and “B” above are fulfilled.

The conduct of the Preliminary Acceptance Survey shall be contingent upon receipt by the OWNER of written notice from the CONTR of presumptive completion of all physical work, testing and clean-up provided for under the Contract. The Preliminary Acceptance Survey shall precede the Preliminary Acceptance Trial for the Vessel.

The Preliminary Acceptance Survey shall be solely for the purpose of relating WETA’s determination that, if the CONTR delivers the Vessel in like condition in material, operation and performance, and corrects deficiencies which shall be authorized in writing by the OWNER to be corrected following Preliminary Acceptance but before the Vessel Delivery (see below), the Vessel as constructed and presented is acceptable to the OWNER.

A Preliminary Acceptance Survey for the Vessel shall be a prerequisite to the Delivery of the Vessel to the OWNER’s location.

A Preliminary Acceptance Survey shall be conducted after all physical work, testing and clean-up provided for under the Contract is completed. The intent of the Preliminary Acceptance Survey shall be to affirm that the Vessel is complete; the form, fit and function of installed materials are satisfactory, and the Vessel is clean and clear of rubbish, excess material, etc., in accordance with Section 951. In conjunction with the survey, the status of the compartment close-outs required by the Contract shall be presented for review, with any remaining close-outs performed prior to completion of the Preliminary Acceptance Survey.

The existence of any uncorrected deficiency affecting the safety, operation, performance or immediate efficient use of the Vessel for its intended service shall be sufficient cause to reject Preliminary Acceptance of the Vessel pending correction of the deficiency by the CONTR. The existence of uncorrected deficiencies shall likewise be a cause for rejection of the Vessel until their number has been reduced to a level acceptable to the OWNER.

Upon completion of the Preliminary Acceptance Survey and Trials for the Vessel, a letter relating WETA’s determination regarding Preliminary Acceptance of the Vessel shall be issued by the OWNER. The letter shall provide notice as to the extent of unsatisfactory or incomplete Work which must be corrected or completed prior to the Final Acceptance Trials of the Vessel, and which discrepancies, if any, may be deferred for accomplishment after Final Acceptance Trials, but before Final Acceptance Survey of the Vessel. In connection with this notice, it must be recognized that under the terms of the Contract, the CONTR is required to deliver a complete Vessel that is free of all deficiencies, and that deferral of corrective Work is not a waiver by the OWNER of its entitlement to a complete Vessel that is free of deficiencies.

The CONTR shall immediately take appropriate action to correct and complete any work that is determined to be unsatisfactory or incomplete, and shall be responsible for any delay in the Project associated with correcting deficiencies. The cost of such delay shall be at the CONTR's expense.

Any work or operation of the Vessel called for by the OWNER in the course of inspection of previously unsatisfactory or incomplete Work shall be performed at the CONTR's expense in advance of Preliminary Acceptance.

Preliminary Acceptance by the OWNER shall not constitute acceptance by the OWNER of any latent defects or other deficiencies which may develop or be identified subsequent to Preliminary Acceptance, but prior to completion of the warranty period. Such defects and deficiencies shall be the responsibility of the CONTR to correct. In addition, Preliminary Acceptance shall not stop the count of construction time, nor shall such acceptance be the basis for starting the count of time for the warranty/guarantee period.

837 FINAL ACCEPTANCE, SURVEY & TRIALS

Following successful completion of Preliminary Acceptance Survey and Trials, issuance of Preliminary Acceptance, and Delivery, the CONTR shall conduct Final Acceptance Trials. The OWNER will issue Final Acceptance when the following requirements are fulfilled to the OWNER's satisfaction:

- Completion of shipboard CONTR-responsible training.
- USCG Sector approval.
- Round-trip transit times achieved as described in Section 061.
- Compatibility with passenger-loading facilities and demonstration of passenger loading/unloading rates as described in Section 063.
- The Final Acceptance Survey described herein is completed, with the results supporting a conclusion by the OWNER that the Vessel is complete, clean, free of deficiencies, and in compliance with the Contract to the satisfaction of the OWNER.
- Satisfactory provision of documentation evidencing transfer of title to the vessel to WETA.
- Final Acceptance Trials are completed.

The CONTR shall immediately take appropriate action to correct and complete any work that is determined to be unsatisfactory or incomplete and shall be responsible for any delay in the Project associated with correcting deficiencies. The cost of such delay shall be at the CONTR's expense.

Any work or operation of the Vessel called for by the OWNER in the course of inspection of previously unsatisfactory or incomplete Work shall be performed at the CONTR's expense in advance of Final Acceptance.

If the Final Acceptance Trials and Final Acceptance Survey reveal only minor defects or deficiencies that WETA determines do not prohibit it from placing the Vessel in revenue service, then WETA may at its sole discretion Finally Accept the Vessel. OWNER will provide CONTR with written notice of unsatisfactory or incomplete Work which must be corrected or completed prior to Completion of the Warranty Period, Section 952. Correction of discrepancies, if any, may be deferred until after Final Acceptance Trials, but before Completion of the Warranty Period. In connection with this notice, it must be recognized that under the terms of the Contract, the CONTR is required to deliver a complete Vessel that is free of all deficiencies, and that deferral of corrective Work is not a waiver by the OWNER of its entitlement to a complete Vessel that is free of deficiencies.

WETA will certify Final Acceptance by issuing Contractor a Certificate of Final Acceptance.

Following Final Acceptance, the completed Vessel shall be turned over to WETA's Operator in Vallejo, California. The CONTR shall fill all fuel tanks, top up all fluids, and present a vessel ready and fit for service to WETA.

Final Acceptance Payment against the Contract shall be made by the OWNER within 30 calendar days of the OWNER's issuance of a Certificate of Final Acceptance.

840 QUALITY ASSURANCE AND INSPECTION OF WORK AT CONTRACTOR'S SITE

Nothing contained in this subsection shall in any way restrict or impair the OWNER's rights under any warranty or guarantee.

The CONTR shall utilize a Quality Assurance (QA) program that assures that all aspects of design, construction, and completion of the Work comply with the requirements of the Contract. The program shall ensure that the latest applicable drawings, requirements, specifications and instructions defined in the Contract, as well as authorized changes, are communicated to workers and used in the Work. The program shall also include sequential and well-documented inspections and tests of completed elements of Work by the CONTR. The intent of these inspections and tests shall be to identify and resolve all deficiencies prior to presentation of the Work to the OWNER for acceptance. The QA program and its implementation plan (described below) shall be coordinated with the inspection and test requirements of the Contract; as well as the weight control program, noise and vibration control program, and other programs required by the Contract or otherwise developed by the CONTR to control the Work.

The personnel assigned to the development and administration of the QA program shall have independent authority and organizational freedom to identify and evaluate quality problems and initiate and recommend timely and positive solutions.

The implementation of QA procedures by a Subcontractor or Vendor does not relieve the CONTR of their responsibility to assure that the supplied items fully comply with the requirements of the Contract.

At a minimum, the Quality Assurance program shall make provision for the following or similar:

A. A status report shall be provided monthly, on a mutually pre-established date, by the CONTR, listing any and all discrepancies in a Discrepancy Report (hereinafter "DR") and their disposition(s). Outstanding issues shall be highlighted.
B. A process utilizing a CONTR-developed standard DR form, through which the OWNER can communicate potential issues and problems to the CONTR. The form shall include, at a minimum:
    a. Independent tracking number suitable to the OWNER;
    b. Date of issue initiated or identified by the OWNER;
    c. Reference drawings/materials and revisions;
    d. Subject;
    e. Requirement references;
    f. Issue or problem description;
    g. Signature column by OWNER and date, if corrected;
    h. Response area for CONTR, sign off and date.

The CONTR shall be responsible for tracking and providing a disposition for all issues raised by the OWNER.

The CONTR shall maintain and comply with its internal QA program as reviewed by the OWNER.

840.1 FACTORY ACCEPTANCE TESTING

Contractor must conduct factory testing of specified equipment. CONTR must identify all factory-tested equipment for prior approval by OWNER and shall submit documentation of test results to the OWNER for OWNER's approval. Examples of some equipment subject to Factory Acceptance Testing include:

- Pressure test of non-integral tanks or pressure vessels.
- Operational and load tests for generator engines on test beds in compliance with the regulatory requirements.
- Functional tests for other machinery, electrical and electronic equipment at vendor's facilities.
- Other components as requested by the CONTR and specifically approved by the OWNER.

841 TESTING AND TRIALS REQUIREMENTS

The CONTR shall develop, in cooperation with the OWNER, a comprehensive testing and trials plan. The plan shall identify all testing milestones, communicate and continually update a testing schedule, define testing procedures and track deficiencies, corrections and acceptance.

The successful CONTR shall provide a Master Test Plan and Index for OWNER's approval before agreement signing. No less than ten (10) days prior to beginning any test, the CONTR shall provide test procedures to the OWNER for approval.

Tests shall be conducted to the requirements and satisfaction of the OWNER, classification society inspector, and USCG Officer in Charge Marine Inspections (OCMI) and shall consist of the following phases:

- Factory Acceptance Testing
- Quality Assurance & Component Testing
- Dock Trials (System Testing), see Section 982.1
- Sea Trials (Vessel Testing), see Section 982.2

Following completion of Sea Trials, any item of CONTR-furnished equipment that shows questionable operating characteristics shall be thoroughly examined and repaired by the CONTR, if necessary. The tightness of all electrical connections, switches, circuit breakers, and buss bars shall be verified to the OWNER's satisfaction. If repairs are necessary or if the performance of any CONTR-furnished equipment does not meet specification requirements, tests of the individual units are to be repeated by the CONTR and corrections made until the equipment meets the specifications.

The CONTR shall provide all instruments for operational tests. The type and quantity shall be such that they shall provide sufficient data to analyze the performance of systems, machinery, and equipment. Electric motor test instruments shall include a voltmeter, ammeter, and watt-meter, either as separate meters or combined in a single analyzer.

Ship's gauges and instruments may be used for tests of the systems they serve provided they have been calibrated. Shipyard test instruments and means of connection shall be provided as necessary for additional readings required to test machinery and systems.

The CONTR shall check test instruments against standards at the beginning and end of the test program. If readings taken during a test appear unreasonable, the OWNER's Representative can require the CONTR to check all the instruments, gauges and thermometers, whether ship or test instruments, used on the test in question.

The CONTR is responsible for all costs associated with all testing and trials. If for any reason, additional sea trial(s) are required due to CONTR or vendor issues, the CONTR shall be responsible and bill vendor directly.

841.1 TRIALS CONDITION

- Fully loaded with passengers (simulated weight).
- 90% tankage of fuel, potable water and sewage.

A full passenger load may be simulated with the use of temporary weights (water or other) positioned throughout the Vessel so as to mimic a standard distribution of passengers. CONTR shall submit a simulation plan to the OWNER for approval at least 30 days prior to trials.

Sea state requirements for speed trials and motions will be determined by the builder and mutually agreed to by the Owner. Conditions on trials shall be documented and signed off by the OWNER and the CONTR prior to final speed documentation.

842 TRAINING

The CONTR shall provide technical instruction and training for the proper operation, preventative maintenance, and basic troubleshooting of the major machinery and control systems, to be conducted by the manufacturer's Technical Representative for up to eight (8) OWNER's personnel, for maintenance and operation of the following equipment:

- Main propulsion engines/emissions system – total six (6) hours.
- Ship's service diesel generators – total two (2) hours.
- Main switchboard and electrical distribution – total four (4) hours.
- Plumbing – total two (2) hours.
- Safety systems – total two (2) hours.
- Pilothouse controls – total eight (8) hours.

Training shall be scheduled and coordinated with the OWNER. OWNER shall make every possible effort to minimize duplication of training but due to operating schedules it may not be possible to schedule all personnel simultaneously for training. Multiple sessions may be required in some or all areas listed above.

OWNER will pay all wages and expenses of OWNER's personnel during training sessions.

860 WARRANTY

The CONTR shall propose a written warranty procedure acceptable to the OWNER that describes the process to accomplish warranty repairs after the Vessel is delivered.

Neither Final Acceptance or payment, nor any provision in the Contract Documents, nor partial or entire use of the Vessels by the OWNER shall constitute an acceptance of Work not done in accordance with the Contract Documents or relieve the CONTR of liability for faulty materials or Workmanship.

The CONTR shall furnish the OWNER with all warranties, including manufacturer's warranties, specified in the OWNER's Requirements and General Provisions, and submit them to the OWNER prior to Final Acceptance of the

Vessel. All warranties shall be provided by and processed through the CONTR. All warranties shall commence after Final Acceptance of the Vessel by the OWNER.

It is understood and agreed that the OWNER does not waive any warranty, either express or implied, in Sections 2312 through 2317, inclusive, of the California Commercial Code, or any liability of the manufacturer or CONTR as may be determined by a decision of the court of the State of California or of the United States

The OWNER shall give notice to CONTR of deficiencies on each of the Vessels. CONTR guarantees and warrants that all equipment and components in each of the Vessels shall conform to the requirements of the Contract.

The CONTR shall also guarantee all material and workmanship entering into the Vessels and furnished by CONTR, or any Subcontractors, suppliers or vendors on its account, against defects in material or workmanship, or latent defects which may develop within 365 calendar days following the date of Final Acceptance of the Vessel by the OWNER. Any items of material or workmanship found defective, or found not to operate in accordance with the requirements of the Contract, shall be repaired or replaced at CONTR’s option by the CONTR at the CONTR’s expense. The CONTR shall pass through any optional extended warranties exercised by the OWNER on the entire power train, engines, and gears to the OWNER. The CONTR does not have any additional warranty responsibility after the warranty period expires, except to assist the OWNER with extended warranty issues.

If, in the opinion of the OWNER, immediate repairs or replacements are essential to keep a Vessel on its scheduled operations, these repairs may be made by the OWNER and back-charged to the CONTR. The OWNER shall give prompt notice to the CONTR that the immediate corrective action is being taken and provide clear documentation of the deficiency, the action taken and the cost attributable to the deficiency.

Where the OWNER’s action results in the betterment of material, the CONTR shall not be responsible for the reimbursement for the betterment. If immediate repairs are not necessary, the CONTR shall be notified and given fourteen calendar days to examine and provide a written plan of rectification complete with a detailed time schedule, subject to the approval of the OWNER. If the defects are not addressed sufficiently or a detailed rectification plan is not provided by the CONTR and approved by the OWNER within this period, the OWNER may correct the defects and back-charge the correction costs, including labor, to the CONTR.

Immediately prior to expiration of the Guarantee/Warranty Period set forth in this subsection and prior to the Completion of Warranty Period milestone payment in the Contract, a Guarantee Survey shall be conducted for the purpose of determining remaining deficiencies to be corrected in compliance with the requirements of the guarantee. The Survey shall be made by the OWNER, CONTR's representative(s), and applicable regulatory body representatives. The time and place for the Guarantee Survey shall be at the convenience of the OWNER, having due consideration for the Vessels schedule and commitments. All fees/expenses required by regulatory bodies for their participation shall be borne by the CONTR.

Upon expiration of the 365 calendar day Guarantee/Warranty Period, all remaining product guarantees as originally obtained by the CONTR for materials and equipment from vendors and suppliers shall be assigned or reassigned to the OWNER.

If any materials or equipment from vendors or suppliers fails after the 365 calendar day Guarantee/Warranty Period, but before the expiration of remaining vendor, supplier, or manufacturer product guarantees, CONTR shall cooperate with the OWNER to assist in enforcing the remaining product guarantees from vendors, suppliers, and manufacturers.

For determination of underwater deficiencies, the OWNER, at its expense, may drydock the Vessels or carry out an underwater survey, during the Guarantee/Warranty Period. The OWNER shall pay for the haul day, re-float day and

any days required to accomplish the Vessels' normal drydocking maintenance; provided, however, that if a warranty deficiency is discovered which requires additional drydocking time, the CONTR, in addition to the cost of the correction of the warranty deficiency, shall pay for each additional drydocking lay day due to correcting the warranty deficiency. If it becomes necessary to drydock the Vessels solely for the correction of a warranty deficiency, the CONTR shall be liable for the entire drydocking charge required for correction of the warranty deficiency as well as the cost of remedying the warranty deficiency.

Should any disagreement arise in connection with warranty deficiencies, the CONTR may dispute any action taken by the OWNER in the manner set forth in, and subject to the terms of the contract.

In addition, CONTR warrants that, for a period of 365 days after the Final Acceptance of the Vessel, the Vessel shall be free from Defects. As used herein "Defect" means (a) a material variance between the Vessel as delivered and the Vessel as required in this Agreement, the Plans and Specifications, modified by mutually approved change orders, (b) an instance in which the CONTR's design of or workmanship in the Vessel is not equal to or better than the general standard of design or workmanship that prevails in the commercial passenger only Vessel industry, or (c) a defect in workmanship or materials under normal use and service provided, however the following are not defects, and the CONTR's warranty does not apply to or include defects, damages or claims to the extent caused by:

a) failure of OWNER to perform required maintenance and servicing;
b) normal expected wear and tear during warranty period, also abuse, misuse, accident, vandalism, neglect, and improper operation by OWNER;
c) repairs or replacements not authorized by CONTR in violation of warranty terms;
d) any OWNER Furnished Equipment, except that the CONTR warrants its Workmanlike installation of OWNER Furnished Equipment in accordance with the manufacturer's specifications, good shipbuilding practice sand approved marine construction practices

The CONTR shall also guarantee all material and Workmanship entering into the Vessels and furnished by him during the warranty period. If a Vessel is not operational due to warranty repairs, replacements or other Work required, by a fault of the CONTR's Workmanship, the warranty period for the CONTRs workmanship shall automatically be extended for a period of time equal to the number of calendar days that the Vessel is non-operational as a result of warranty Work.

If during the warranty period the OWNER determines that equipment or component parts fail to satisfy the terms of the warranty, the CONTR must promptly repair or replace the failed equipment or component part to the satisfaction of the OWNER.

The OWNER, by determining that Final Acceptance has been achieved, does not waive any warranty, express or implied, under Sections 2312 to 2317 of the California Code with respect to any materials, equipment or supplies manufactured, supplied Commercial or assembled by the CONTR pursuant to this Contract.

CONTR shall be responsible for consequential damages due to a warranty Defect as described herein, to the extent not disclaimed in the contract agreement.

900 SHIPYARD CONTRACT SERVICES

901 SCOPE AND INTENT OF CONTRACT

The CONTR is required to notify the OWNER of any deviations in the Contract Design Package from the Technical Specification. The scope of the Work associated with the term “design,” as used throughout the Contract documents, shall be broadly interpreted to be inclusive of the associated engineering, calculations, studies, and other related work necessary to affect a thorough design. The term “material” shall be broadly interpreted to include vessel “equipment,” except where a clear distinction is being made otherwise.

902 PROSECUTION AND PROGRESS

Following Contract Award the CONTR shall submit the following to the OWNER:

A. Project Schedule (see Sections 921 - 924).
B. The following lists derived from the Project Schedule:
    a. A list showing anticipated dates for procurement of materials and equipment, or the ordering of articles of special manufacture.
    b. A list showing proposed begin and end fabrication and installation dates for Vessel systems, tests and trials, maintenance items, and other items of scheduled Work.
    c. Installation dates for vessel systems, tests and trials, maintenance items, and other items of scheduled work.
    d. A list of proposed shipment dates for material other than stocked items.
C. Deliverable Schedule (see Section 925).
D. A letter designating the Equal Employment Opportunity Officer and that person's responsibilities and authority.
E. A list showing all proposed Subcontractors, Vendors, and Suppliers to be used, their addresses and applicable purchase order numbers.
F. A letter designating the CONTR's Project Manager, defining that person's responsibility and authority, and providing a specimen of his signature.

The CONTR shall provide adequate materials, labor and equipment to ensure the completion of the Project in accordance with all Contract requirements. The Work shall be performed as vigorously and as continuously as conditions may permit. The CONTR shall take into consideration and make due allowances for foreseeable delays and interruptions to the Work such as weather, equipment breakdowns, shipping, Regulatory agency inspections and approvals. Receipt and acceptance of a schedule submitted by the CONTR shall not be construed to assign responsibility for performance or contingencies to the OWNER or relieve the CONTR of their responsibility to adjust work forces, equipment, and work schedules as necessary to insure completion of the work within the prescribed time (See Sections 941 through 946).

The OWNER may require up to three OWNER’s Designated Representatives onboard for all legs of deliveries at OWNER's expense.

910 MANAGEMENT REVIEW & PROGRESS MEETINGS

The CONTR shall present Management Reviews to the OWNER. The reviews shall be scheduled monthly at a location in or near the construction shipyard and shall be coordinated so that they are held concurrently with the progress

meetings. The first review is to be held within thirty (30) calendar days following Notice to Proceed. These reviews shall, at a minimum, address the following topics:

A. Status of the design and outstanding design issues. Actions taken to resolve issues and schedules for same shall be included. OWNER-responsible actions that affect the CONTR shall also be included.
B. Material status, certification, delivery schedule and other outstanding issues. Actions taken to resolve issues and schedules for same shall be included. OWNER-responsible actions that affect the CONTR shall also be included.
C. Construction schedule, issues and status. Actions taken to resolve any issues shall be addressed. OWNER-responsible actions that affect the CONTR shall be included.
D. Status of the Work to date, current and potential problem areas that could affect the Project Schedule and cost, and activities including inspections scheduled for the following two weeks.
E. Regulatory Body approval and certification; status and outstanding issues; actions underway to resolve any outstanding issue(s).
F. Quality Assurance.
G. Schedule of Values and payment.
H. Change Order status and any contractual issues.

The CONTR shall identify any OWNER actions that are requested or required to resolve issues and/or support the CONTR's efforts.

The CONTR shall prepare an agenda and submit to the OWNER for review prior to the meeting. The OWNER may request additional topics for the Management Review and the CONTR shall address those topics during the meeting. A copy of the final agenda and any supporting documentation shall be provided to the OWNER not less than twenty-four (24) hours prior to each scheduled meeting date.

The CONTR shall provide a written record of the minutes of the progress meetings and maintain a file of minutes. The OWNER shall acknowledge receipt of the minutes and may provide comments or additional information to the CONTR to be appended to the minutes. The acknowledgement of the minutes by the OWNER shall not constitute acceptance of any item of equipment or component parts.

921 PROJECT SCHEDULE

Within seven (7) calendar days after Notice to Proceed the CONTR shall prepare and submit to the OWNER for review and comment a manpower resource loaded schedule as described below. The OWNER to review and comment within seven (7) calendar days. CONTR then has seven (7) calendar days to modify or comment on the OWNER’s review and resubmit the schedule. After the OWNER’s comments are addressed to the satisfaction of the OWNER, the schedule at that time shall become the Project Schedule. The Project Schedule is to be developed to the CONTR’s normal detail and as agreed in this document to produce OWNER-specific information, and shall be prepared by the CONTR’s “in-house” supervisory personnel. The Project Schedule should not deviate significantly from the preliminary schedule submitted with the CONTR’s Proposal. The completed Project Schedule shall define the operations required to bring the entire work to Final Acceptance by the scheduled Final Acceptance date and within the allotted time. The Project Schedule may be modified to incorporate the most efficient use of CONTR resources provided no additional costs or time delays are incurred on the Project.

The CONTR warrants that the Project Schedule is the CONTR’s committed plan to complete all Work within the allotted Contract Time and assumes responsibility for prosecution of the work as shown. The CONTR shall utilize the

Project Schedule in planning, scheduling, coordinating, and performing the Work under this Contract (including major activities of subcontractors, equipment vendors, and suppliers).

The purpose of the Project Schedule shall be to:

A. Assure adequate planning, scheduling and reporting during execution of the work by the CONTR;
B. Assure coordination of the work and material procurement of the CONTR and all subcontractors;
C. Assist the CONTR and OWNER in monitoring the progress of the work and evaluating proposed changes to the Contract and the Project Schedule; and

NOTE: The Project Schedule shall be developed to connect and drive the work from Contract Award. The Project Schedule shall be developed to the contactors normal detail of major tasks by trade and job cost numbers.

The CONTR shall provide the Project Schedule to the OWNER in both electronic (on Microsoft Project compatible software) and hard copy format.

922 SCHEDULE REQUIREMENTS

The Project Schedule shall incorporate labor and major equipment resource data as described below. The schedule must show the order in which the CONTR proposes to carry out the Work. The Project Schedule shall cover the time from Notice to Proceed to Final Acceptance, which period of time constitutes the Contract Time. The Project Schedule shall be itemized in sufficient detail to cover at a minimum the following tasks:

A. Milestones set forth in Section 6 of the Agreement.
B. Anticipated dates for procurement of materials and equipment, or the ordering of articles of special manufacture;
C. Construction broken down into modules for each major structure unit, Vessel system, or task, including proposed begin and end construction dates and installation dates.
D. All subcontract/vendor/supplier activities, including begin and end dates.
E. Any anticipated periods of shutdown and multiple-shift Work.
F. Major inspection and testing. Final testing as defined for regulatory body approval, OWNER’s approval or for Acceptance Trial approval. Intermediate testing shall be updated as construction progresses and added to the schedule as known.
G. Trials and Acceptance tests.

Failure by the CONTR to include any element of Work required for performance of the Contract shall not excuse the CONTR from completing all Work by the scheduled Final Acceptance date.

923 SCHEDULE UPDATES

The Project Schedule shall be updated whenever a Milestone Payment request is submitted for payment. The updated Project Schedule shall include the dates activities were actually started and when they were completed, the physical percentage of work complete, and the estimated remaining duration for each activity in progress.

The CONTR shall also prepare a description of the amount of progress during the last reporting period in terms of completed activities, a description of problem areas, current and anticipated delaying factors and their estimated impact on performance of other activities and completion dates and an explanation of corrective action taken or proposed. The report shall include a forecast of key activities to be completed, started and worked during the next 15 calendar days.

The CONTR shall submit a corresponding schedule update when a milestone payment is requested and will only be entitled to payments upon OWNER approval of the milestone request. The electronic and hard files provided shall be a complete copy of all information contained in the schedule.

Updating the Project Schedule to reflect actual progress made shall not be considered a revision to the Project Schedule.

924 SCHEDULE REVISIONS

If, as a result of the schedule updates, the schedule no longer represents the planned prosecution or progress of the remaining work, the OWNER may request, and the CONTR shall submit, a revision to the Project Schedule.

The CONTR may also request revisions to the Project Schedule in the event the CONTR's planning for the remaining work is revised.

Such revised schedules or lists shall conform to the Contract Time allocated by the Contract and take into account delays that may have been encountered in the performance of the Work. In submitting a revised schedule, the CONTR shall state specifically the reason for the revision and the adjustments made in his schedule or methods of operation to ensure completion of all Work within the prescribed time.

Should the prosecution of the Work during normal Work days be discontinued for any reason, for more than two calendar days, the CONTR shall notify the OWNER at least twenty-four (24) hours in advance of resuming operations.

925 DELIVERABLE SCHEDULE

The CONTR shall submit a schedule of dates for deliverables. This Deliverable Schedule is the CONTR’s committed plan to complete the engineering and design within the Contract Time. The Deliverable Schedule shall list all drawings, analyses, reports, Technical Specifications, purchase technical specifications, and other deliverables that must be developed pursuant to the OWNER’s Requirements and other Contract Documents.

The Deliverable Schedule shall provide for various interim submittals, revisions, and a final submittal of each deliverable, and shall include columns giving the intended dates of all submittals. The quantity and timing of submittals for each deliverable shall be proposed by the CONTR in the Deliverable Schedule, and should appropriately consider the need for OWNER endorsement of intended arrangements and other salient characteristics of the design.

The Deliverable Schedule shall include columns for the following entries for each listed deliverable: scheduled dates of submittals, actual dates of submittals, latest revision (by letter), drawing size, outstanding reservations, and expected release date. The Deliverable Schedule shall also identify deliverables that are required to be submitted to each Regulatory Body for approval, review and/or information, and the expected and actual dates of such approvals.

CONTR shall provide electronic copies of all drawings and data to OWNER for at least a seven (7) calendar day review and comment period. All drawings prepared for submittal to the U.S. Coast Guard shall be reviewed by OWNER prior to submittal to U.S. Coast Guard. OWNER shall receive all drawings approved by the U.S. Coast Guard.

The Deliverable Schedule shall be revised to show all changes, progress and delays, and shall be submitted monthly to the OWNER at least three (3) days prior to the monthly Management Review meeting.

931 OWNER APPROVAL OF WORK

Where the words "approved" or "for approval" are used without reference to the approving authority, they shall mean "approved by the OWNER" and "for the OWNER's approval." "Approved" status cannot be conferred by anyone but an authorized employee or other representative of the OWNER. OWNER approval does not relieve the CONTR of securing Regulatory Body approvals as required herein.

In no event shall approval by the OWNER of any aspect of the CONTR's Work be a warranty that the Work is complete, accurate or of sound design, or that the Work complies with Regulatory Body requirements. Such characteristics of the Work are the CONTR's responsibility, and any subsequent discovery of omissions or deficiencies with regard to the completeness, accuracy or soundness of the Work, and/or conformance with the Contract, and/or compliance with Regulatory Body requirements, shall be remedied by the CONTR to the OWNER's satisfaction through correction of the omissions or deficiencies at the CONTR's expense, irrespective of prior approval of the Work by the OWNER.

Any submittal that is found to be substantially deficient upon review shall be rejected and returned to the CONTR for resolution of deficiencies and resubmitted. A "rejected" determination shall void any credit which may otherwise be due the CONTR with regard to meeting a deadline for submission of the material in question.

930.1 REGULATORY BODY REVIEW, APPROVAL AND CERTIFICATION OF WORK

The CONTR shall plan, coordinate and obtain in a timely manner all Regulatory Body inspections of the Work, and reviews and approvals of the related drawings, specifications and other documentation, as required to obtain the required regulatory classifications and certifications of the Vessel. A schedule of inspections, tests and trials requiring Regulatory Body observance shall be maintained in accordance with the provisions of the Technical Specifications.

The Contract Design Package shall be submitted to the USCG for compliance review with respect to USCG and applicable regulations, specifically addressing requirements for 46 CFR Subchapter K passenger vessels.

All deliverables shall be revised to address comments provided by the Regulatory Bodies in conjunction with their reviews. This work shall be accomplished to the satisfaction of the OWNER.

All fees associated with inspections, witness of material and equipment tests and certifications, reviews and approval of Work, and classification and certification of the Vessel by Regulatory Bodies shall be included within the Contract Price. Costs of travel and per diem for visits to CONTR's and manufacturers' facilities by Regulatory Body agents shall be considered included in the Contract Price.

A copy of all written communications, which includes electronic transmissions of information or letters, between the CONTR or its agents and the Regulatory Bodies, and any attached drawings or other technical documentation included with each written communication, shall be provided to the OWNER if requested. A copy of each item of written communication, plus any attached technical documentation, from the CONTR or its agents to a Regulatory Body shall be forwarded to the OWNER if requested, on the day the communication is mailed or otherwise transmitted to the Regulatory Body. A copy of each item of written communication, plus any attached technical documentation, from a Regulatory Body to the CONTR or its agents shall be provided to the OWNER within two days of receipt by the CONTR or its agents.

932 CONFORMITY WITH CONTRACT

All Work performed and all materials furnished shall be in conformity with the Contract. In certain respects, the requirements of the approved design for the Vessel may exceed the requirements of pertinent Regulatory Bodies. Such approved design requirements shall not be changed except on written approval of the OWNER.

933 COOPERATION BY CONTRACTOR

The CONTR shall maintain a minimum of two full size sets of approved plans and Contract Documents, one set of which the CONTR shall keep available on the Work site at all times.

The CONTR shall give the Work the constant attention necessary to facilitate the progress thereof in accordance with the Project Schedule, and shall cooperate with the OWNER, their Inspectors and other CONTRs in every way possible.

The CONTR shall have on the Work site at all times, as their agent, a competent Superintendent or Project Manager, thoroughly experienced in the type of Work being performed and capable of reading and thoroughly understanding the plans and specifications, who shall receive instructions from the OWNER or their authorized representatives to the extent provided elsewhere in the Contract Documents. The Superintendent or Project Manager shall have full authority to supply such materials, equipment, tools, labor and incidentals as may be required. Such Superintendent or Project Manager shall be furnished irrespective of the amount of Work subcontracted.

The CONTR shall bear the sole risk and the obligation to rebuild, repair, restore, replace and to otherwise make good all damage, loss or injury to all or any portion of the Vessel, and to any Work or material for the Contract, including Change Order Work, on or incorporated into the Vessel until the entire Work for both Vessel has been finally accepted by the OWNER.

934 DUTIES OF THE OWNER’S INSPECTORS

Inspectors employed by the OWNER are authorized to inspect all Work done and materials furnished. The Inspector is not authorized to issue instructions contrary to the terms of the Contract documents, or to act as foreman for the CONTR; however, the Inspector shall have the authority to reject Work and materials, which rejection the CONTR may request to be decided by the OWNER. The OWNER’s personnel are not to be considered part of CONTR’s Quality Assurance personnel.

936 REMOVAL OF UNACCEPTABLE AND UNAUTHORIZED WORK

All Work that does not conform to the Contract shall be considered as unacceptable Work, unless determined acceptable under in the OWNER’s sole discretion the provisions of Section 932.

Unacceptable Work, whether the result of poor workmanship, use of defective, unsuitable, or unauthorized materials or equipment, or damage through carelessness or any other cause, found to exist prior to the Completion of the Warranty Period, shall be remedied or removed immediately and replaced in an acceptable manner at the CONTR’s expense.

No Work shall be done on the Vessel except as required by the Contract or directed by WETA. Work done contrary to directives, except as herein provided, or any Work done without authority, shall be considered as unauthorized and shall not be paid for under the provisions of the Contract. Work so done may be ordered removed or replaced at the CONTR's expense.

Upon failure on the part of the CONTR to comply forthwith with any order of the OWNER made under the provisions of this section, the OWNER shall have authority to cause unacceptable Work to be remedied, or removed and replaced, unless determined acceptable under Section 932. No change in the Contract Price will be allowed in respect to any costs incurred by CONTR for such remedial work.

941 CONTRACT TIME DEFINITION

Contract Time shall be the period of time, measured in calendar days, that is allocated to the CONTR to complete the design and construction Work required by the Contract and to redeliver the Vessel to the OWNER in full compliance with the Contract requirements and Preliminary Acceptance by the OWNER. Contract Time equals the number of days of time stipulated in the Contract at the time of Contract Award as proposed by the CONTR and agreed to by the OWNER, plus any additional days of time allocated during the course of the Contract by approved extensions of time, minus any days of time reclaimed by the OWNER based upon reductions in the scope or character of the Work during the course of the Contract.

The count of Contract Time expended shall begin on the date of the Notice to Proceed. The count of Contract Time, in conjunction with approved modifications or suspensions of the count of Contract Time, shall be the basis for establishing the approved scheduled date of Acceptance and for assessing liquidated damages associated with untimely Vessel Delivery as described in Section 945. Failure to complete the Work, submit all deliverables, and deliver the Vessel to the OWNER within the Contract Time may also be an event of default authorizing the OWNER to take any steps permitted by the Contract Agreement.

942 EXTENSION OF CONTRACT TIME

The OWNER may consider requests for extension of Contract Time and, if deemed warranted, approve extensions of Contract Time equal to the number of additional days considered by the OWNER to be necessary to accomplish approved change Work or Work associated with OWNER -issued directives other than Work orders. Work associated with changes and directives, or any portion of such Work, which could reasonably be accomplished within the Contract Time, as determined by the approved CONTR's schedule, shall be completed within the established Contract Time.

The CONTR shall be responsible for promptly requesting extensions of Contract Time and for furnishing any and all information necessary to justify each proposed extension to the satisfaction of the OWNER. For changes to the Work, a request for extension of Contract Time shall be considered timely only if the request is included with the CONTR's originally submitted Change Order.

Under no circumstances shall Contract Time be extended due to inclement weather or the results of inclement weather. However, extraordinary weather conditions for the pertinent geographical area may, but not necessarily shall, provide a basis for an extension of Contract Time. Severe weather, including hurricanes, with historical precedent in the pertinent geographical area is not extraordinary weather.

Approved change documents and OWNER -issued directives which reduce the scope of the Contract or change the character of the Work so as to justify a reduction in the amount of Contract Time allotted, may result in an agreement between the parties to the Contract, to reduce the number of days of design time or construction time, as applicable.

Extensions to Contract Time must be approved in writing by the OWNER.

A claim that insufficient Contract Time was originally specified or otherwise required by the Contract shall not constitute a valid reason for extension of Contract Time.

943 SUSPENSION OF CONTRACT TIME

The OWNER may, by written order, suspend Work on the Project, in whole or in part, for such periods as he determines to be necessary. The OWNER shall discuss impact of suspension with CONTR to determine impact on schedule. Unless an item of Work is suspended which is agreed by the OWNER to be on the Critical Path of the Project Schedule, no consideration shall be given to extending the Contract Time or stopping the count of Contract Time during the period of suspension of the Work until an item lands on the Critical Path.

In those instances where the OWNER orders suspension of the Work for failure by the CONTR to carry out contractual provisions, the count of Contract Time shall continue throughout the suspension period.

Suspension of the count of Contract Time may be allowed by the OWNER because of delays in the completion of the Work due to unforeseeable causes beyond the control of and without the fault or negligence of the CONTR, including but not restricted to acts of God or the public enemy, fires, floods, epidemics, quarantine restrictions, strikes, freight embargoes, and extraordinary weather or delays of Subcontractors due to such causes provided that the CONTR shall, within 10 calendar days of the beginning of any such delay, notify the OWNER in writing of the cause of delay and request suspension of the count of Contract Time. The OWNER shall ascertain the facts and the extent of the delay and the parties shall agree upon the number of days that justify such suspension.

Suspension of Work by the OWNER or delays in the completion of the Work shall not constitute grounds for any claims by the CONTR for damages or extra compensation unless otherwise provided for in the Contract.

For any suspension in the count of Contract Time to be allowable, such suspension must be approved in writing by the OWNER.

944 SUSPENSIONS OF WORK ORDERED BY THE OWNER

If the performance of all or any portion of the Work is suspended or delayed by the OWNER in writing for an unreasonable period of time (not originally anticipated, customary, or inherent to the shipbuilding industry) and the CONTR believes that additional compensation and/or Contract Time is due as a result of such suspension or delay, the CONTR shall submit to the OWNER in writing a request for adjustment within 7 calendar days of receipt of the notice to resume Work. The request shall set forth the reasons and support for such adjustment.

Upon receipt, the OWNER shall evaluate the CONTR's request. If the OWNER agrees that the cost and/or time required for the performance of the Contract has increased as a result of such suspension and the suspension was caused by conditions beyond the control of and not the fault of the CONTR, its suppliers, or Subcontractors at any approved tier, and not caused by weather, the OWNER shall make an adjustment including reasonable profit and modify the Contract in writing accordingly. The OWNER shall notify the CONTR of his determination whether or not an adjustment of the Contract is warranted.

No Contract Time adjustment are allowed unless the CONTR has submitted the request for adjustment within the time prescribed.

No Contract Time adjustment are allowed under this clause to the extent that performance would have been suspended or delayed by any other cause, or for which an adjustment is provided for or excluded under any other term or condition of this Contract.

945 FAILURE TO DELIVER ON TIME

Liquidated damages associated with untimely delivery of the Vessel shall be charged against the CONTR's account by the OWNER beginning the day after the scheduled Final Acceptance date of the Vessel and ending on the actual Final Acceptance date of the Vessel. The day of Final Acceptance of a Vessel shall stop the accrual of liquidated damages associated with untimely delivery and shall not be included in the count of days chargeable to liquidated damages. Liquidated damages shall not apply if both parties agree that delivery is not viable due to weather or other circumstances.

Notwithstanding any other provision of this Contract to the contrary, the liquidated damages provided for in this subsection shall be the OWNER's sole and exclusive remedy for all damages incurred by reason of the CONTR's failure to complete the Vessel on time.

The scheduled Final Acceptance date of the Vessel shall be the date by which all contracted Work is scheduled to be completed, excluding any Work that may be necessary to correct deficiencies arising during the Warranty/Guarantee Period subsequent to Completion of Warranty Period (see below). The scheduled Final Acceptance date of the Vessel shall determine the number of days of construction time allocated and calculated in accordance with Sections 941 through 946, subject to any days of approved suspension of construction time, after Notice to Proceed.

The Final Acceptance date shall be the date on which the OWNER signs the Certificate of Final Acceptance of the Vessel and takes custody of the Vessel from the CONTR. The Final Acceptance date for the Vessel shall be the start date for the count of time for the warranty/guarantee period for the Vessel.

For each calendar day that the Vessel remains undelivered after the scheduled Final Acceptance date of the Vessel, the sum set forth in the agreement shall be deducted from any moneys due the CONTR. If no money is due the CONTR, the OWNER shall have the right to recover said sum from the CONTR, the surety or both. The Amounts of these deductions are to cover estimated expenses to the OWNER as a result of the CONTR's failure to complete the Work within the time specified. Such deductions are liquidated damages and are not to be considered as penalties.

Permitting the CONTR to continue and finish the Work, or any part of it, after the scheduled Final Acceptance date of a Vessel, as approved by the OWNER, shall in no way operate as a waiver on the part of the OWNER of any of its rights under this Contract.

946 TIME IMPACT ANALYSIS

When Contract modifications are initiated by either the CONTR or the OWNER these changes shall be dealt with using standard Change Order document.

951 FINAL CLEAN-UP

Before the Preliminary Acceptance Survey, all rubbish, excess materials, temporary structures, and CONTR's equipment shall be removed from the Vessel and, as applicable to the item, disposed of. All interior and exterior

surfaces of the Vessel shall be washed, dusted, polished, vacuumed, and/or disinfected, as applicable to the surface, so as to be thoroughly clean, new, undamaged, and fit for OWNER service.

Immediately prior to the Final Acceptance of the Vessel, all surfaces that require re-cleaning as a result of use during the Preliminary Acceptance Trials or other cause shall be washed, dusted, polished, vacuumed, and/or disinfected, as applicable to the surface, so as to be thoroughly clean, new, undamaged, and fit for OWNER service, throughout the Vessel.

952 COMPLETION OF WARRANTY PERIOD

Following completion of the Guarantee/Warranty Period required by Section 860 and all provisions stated therein and upon receipt of the executed final estimate, CONTR's Release, settlement of all claims and proof of payment of any applicable sales, payroll and revenue taxes, the OWNER shall issue the letter of Completion of Warranty releasing the CONTR from further performance under the Contract subject to rights and remedies reserved in the Contract Agreement. Completion of Warranty Period shall be withheld until the CONTR furnishes all certificates, guarantees, releases, affidavits, and other documentation required by the Contract.

953 SEQUENCE OF EVENTS LEADING TO FINAL ACCEPTANCE OF VESSEL

The CONTR shall develop, in cooperation with the OWNER, a comprehensive testing and trials plan. The following table outlines the minimum required tests and trials:

Required Test or Trial	Location	Purpose	Reference Section
Shipyard Internal QA and Testing Plan	CONTR Facility	Routine and ongoing QA and inspection using the shipyard's standard processes and documentation.	840
Factory Acceptance Tests	CONTR or OEM Facility	Test and verification of certain components and equipment with prior approval from the OWNER.	840.1
Dock Trials	CONTR's Facility	Verification equipment / systems perform satisfactory / establish readiness for Sea Trials,	982.1
Sea Trials	CONTR's Facility	Confirm the vessel meets all requirements and functions properly prior to Delivery.	982.2
Preliminary Acceptance	CONTR's Facility	CONTR states readiness for Acceptance Survey and Delivery	836
Delivery	WETA Facility	CONTR shall deliver vessel to the specified WETA facility in San Francisco Bay	983
Drydocking	San Francisco Bay	CONTR shall dry dock vessel in San Francisco Bay for inspection of underwater portions of the hull.	835
Final Acceptance	San Francisco Bay	Vessel to be tested for interface with existing mooring arrangements, passenger load/offload function, and other preparations to go into service. Acceptance whereby The OWNER accepts the Vessel as satisfying all the requirements of the Contract, except the warranty, and signals start of warranty period.	837

970 SPARE PARTS

The OWNER typically maintains a comprehensive inventory of spare parts for its other fleet assets. Commonality with the machinery components of the OWNER's existing fleet assets is desirable to minimize the quantity of spare parts required on hand.

In addition, the main engine dealer spare parts supply shall be guaranteed to be on hand by the engine distributor 50 miles from San Francisco. Supplies shall be available for the foreseeable items which might require immediate replacement, for example, injectors, filters, cooler parts, ECM's, etc. CONTR is to provide a current list of available spares for the engines provided for these new Vessels.

The spare parts listed in the option items table of the schedule of values form in Part D are to be configured exactly as they are in the as built configuration of the delivered vessels. As an example, the engines shall be configured with any options or modifications for the inboard and outboard configurations of the engines in the hulls. The gearboxes shall be quoted as one right hand offset and one left hand offset gearbox matching the units installed in the vessel with all input and output flanges matching the vessels configuration. The shafting spare parts shall match that of an aft engine configuration and a forward engine configuration with all equipment and hardware to replace a complete shaft line for either configuration.

981 PROTECTION AND RESTORATION OF PROPERTY

The CONTR shall be responsible for all damage or injury to property of any character, resulting from any act, omission, neglect, or misconduct in his manner or method of executing the Work, or at any time due to defective Work or materials, during the prosecution of the Work, and said responsibility shall not be released until the Project shall have been completed and accepted.

The CONTR shall safeguard the Vessel’s machinery and electrical equipment, the use of which shall be made only upon the express written approval of the OWNER, and under supervision of competent, trained personnel.

The CONTR shall at all times, insofar as conditions of the Work permit, keep the openings of the Vessel closed against the weather. Deck openings, permanent and/or temporary shall be protected by a watertight coaming with a securely fastened cover.

During the course of the Work, the CONTR shall maintain adequate heating and ventilation throughout the Vessel to preclude the formation of molds and/or other deleterious substances.

981.1 CHARACTER OF WORKERS, METHODS AND EQUIPMENT

The CONTR shall at all time employ sufficient labor and equipment for prosecuting the several classes of Work to full completion in the manner and time required by this Contract.

All workers and management personnel shall have sufficient skill and experience to perform properly the Work assigned to them. Workers engaged in special Work or skilled Work shall have sufficient experience in such Work and in the operation of the equipment required to perform all Work properly and satisfactorily.

Any person, whether worker or superintendent, employed by the CONTR or by any Subcontractor whom the OWNER deems incompetent, careless, insubordinate, or otherwise objectionable, or whose continued employment on the Work is deemed to be contrary to the public interest shall, at the written request of the OWNER, be removed forthwith by the CONTR or Subcontractor employing such person, and shall not be employed again in any portion of the Work without the approval of the OWNER. The OWNER shall notify the CONTR in writing at least five days before submitting a written request to remove any worker and shall cite the reason for the impending removal in the notice.

Should the CONTR fail to remove such person or persons as required above or fail to furnish suitable and sufficient personnel for the proper prosecution of the Work, the OWNER may suspend the Work by written notice until such orders are complied with.

No convict labor shall be employed and no materials manufactured or produced by convict labor shall be used in connection with the Work. This provision shall not be construed as applying to convicts on parole or probation.

The CONTR shall not discriminate against any person because of sex, race, creed, color, sexual orientation, or national origin.

All equipment which is proposed to be used shall be of appropriate size and in such mechanical condition as to meet the requirements of the Work and to produce a satisfactory quality of Work.

When the methods and equipment to be used by the CONTR in accomplishing the construction are not prescribed in the Contract, the CONTR is free to use any methods or equipment that he demonstrates to the satisfaction of the OWNER shall accomplish the Work in conformance with the requirements of the Contract, except as provided above.

When the Contract or manufacturer's instruction specifies that the construction be performed by the use of certain methods and equipment, such methods and equipment are used unless others are authorized.

982 TRIALS

The CONTR shall plan, prepare for, and conduct all required Dock and Sea Trials. The CONTR is responsible for all costs associated with performance of these trials. The purpose of system testing is to ensure that all workmanship is satisfactory, all equipment has been properly installed, all systems are functioning properly, all subcontract work is satisfactory and that all required regulatory inspections have been completed. This program will cover all aspects of construction, including metal work, machinery systems, piping systems, electrical systems, interior and joinery, outfitting and paint.

982.1 DOCK TRIALS

Dock Trials shall be conducted to demonstrate proper functioning of propulsion systems and controls, auxiliary systems, electronics and safety equipment prior to Sea Trials. At least two weeks prior to dock trials, the CONTR will present an agenda to the OWNER for review and comment.

Initial start-up and application of load to the main engines will be performed by the CONTR in conjunction with the engine/reduction gear manufacturer’s representatives. The engine and gear manufacturers will review and approve the installation of the main engines and gears, including alignments prior to engine start-up.

Following initial start-up and testing, the main engines will be run at the dock for a minimum of four (4) hours to demonstrate readiness for Sea Trials. Controls and clutches will be verified from each Control station.

Generator start-up and testing will be completed in conjunction with the generator manufacturer’s representative. Proper function of the switchgear and power management systems will be verified by the switchboard manufacturer. Following initial start-up and testing the generators will be run under vessel load for a minimum of four (4) hours for each generator to demonstrate readiness for Sea Trials.

All auxiliary systems will be run at the dock to verify proper operation. Bilge and fire systems will be demonstrated to be fully operable in case of an emergency during Sea Trials. The proper operation of the steering system will be verified from each Control station, including the emergency steering station.

All navigation and communication electronics will be verified to be functioning properly in conjunction with the electronics vendor.

The proper deployment of the anchor and ground tackle will be demonstrated by lowering and retrieving the anchor in a controlled manner.

The CONTR shall ensure that vendors and subcontractors have all necessary spare parts for their systems on hand so that failures of filters, fuses, gaskets, relays, valves, etc. do not delay dock or sea trails.

The dock trials will consist of the following (not necessarily all-inclusive) list:

- Weather/water tightness of hatches, windows, port lights, doors, shell doors etc.
- Safety equipment – life rafts to be put aboard just before Sea Trials with maximum future service time possible. Fire extinguishers to be put aboard also with inspection dates as far as possible in the future.
- Lifting appliances, cranes, boarding/ accommodation ladders, etc.
- Steering gear.
- Ventilation and heating system.
- Air conditioning.
- Electrical systems and generators, load tests.
- Generator to Generator switching. Shore power to generator switching and vice versa.
- Anchor and mooring equipment.
- Deck equipment, bollards, etc.
- Bilge and fire-fighting systems.
- Sanitary systems.
- Bridge and navigation equipment.
- Hydraulic equipment.
- Alarm tests for safety systems.
- Test of lifesaving equipment.
- Fire shutdown systems for ventilation, valves and required pumps etc.
- Working tests of all machinery.
- Tests of domestic hot and cold water service.
- Black-out test.
- Complete electrical lighting systems.
- Communication equipment.
- Public Announcement and CCTV camera / monitoring equipment, etc.
- Navigation equipment that can be pre-tested in port.
- USCG witnessed deadweight survey.
- Harbor condition noise and vibration level measurements.

The shore fuel, sewage and water connections will be separately verified and tested. Only upon satisfactory completion of the system testing, and after correction of all defects by the CONTR to the satisfaction of the OWNER, the vessel may begin the next stage of testing and trials.

982.2 SEA TRIALS

Following completion of dock trials, Sea Trials will be conducted to demonstrate the performance of the Vessel and proper function of systems underway. Every effort shall be made to replicate a “working” scenario at sea.

The CONTR shall conduct at least two (2) sets of Sea Trials. The first set shall be Builder’s Trials for yard personnel and regulatory inspectors to confirm proper functioning of all systems. During Builder’s Trials the engine and gear manufacturers will verify performance and proper installation of the main engines and gears including developed power, cooling temperatures, etc. Builder’s Trials shall be a minimum of eight (8) hours in length unless specified otherwise.

The second set of Sea Trials shall be Performance Trials to demonstrate contractual performance and proper functioning of all systems to the OWNER. The Performance Trials will be conducted at the full Trial Condition specified in Section 841.1. This trial shall be a minimum of eight (8) hours in length unless specified otherwise.

Sea Trials will be conducted in a location mutually agreed to by the OWNER and the CONTR.

The procedures shall follow SNAME T&R Bulletin C-2, 1973 “Code for Sea Trials.” Sea Trials shall include measurement of speed, fuel consumption, noise, vibration, and wake wash in accordance with the agreement. Care shall be taken to specify, in the test documents, the acceptable level for all figures to be recorded during Trials.

After successful Dock Trial the OWNER will negotiate with the CONTR agreed upon date for Sea Trials. The CONTR will present a Sea Trials agenda to the OWNER for approval and to the equipment manufacturers for review and comment. Following completion of Sea Trials, the CONTR shall prepare the final Sea Trials report in a timely fashion and present the results to the OWNER for OWNER's approval.

At a minimum, Sea Trials shall consist of the following:

- Propulsion Performance Trials (Builder’s Trial only).
- Speed Trials (at full range of RPM).
- Endurance test (minimum 4 hrs. continuous uninterrupted period of 4 hours at full speed ahead).
- Night Trials.
- Emergency Crash Stop (from full speed ahead).
- Split Throttle turning.
- Ahead Steering (at full speed ahead).
- Astern Operation and Steering (up to maximum safe speed, not to exceed 12 knots).
- Turning Circle (at full speed ahead).
- Zigzag Maneuver (at full speed ahead).
- Auxiliary Systems Testing (underway testing of systems, as required).
- Blackout Test.
- Noise and Vibration Survey (underway portion; see Section 057).
- Thermographic Survey of electrical installations.
- Compass Adjustment (Builder’s Trial only).
- Navigation and Communications Systems Testing (underway testing, as required; i.e. GPS, depth sounder, RADAR, integration, etc.).

- Unmanned Engine Room Testing (command, control and monitoring systems).
- Check of tank capacities and draughts for speed runs.
- Controls and helm operation.
- Test from ahead to astern and astern to ahead.
- 'Slow ahead' trial with two engines.
- 'Slow ahead' trial with one engine.
- 'Full ahead' trial on one/two engines at a time, port and starboard.
- Dead ship inspection and start-up.
- Emergency steering and maneuvering.
- Full load test of emergency fire pump, if required.

All domestic items that would normally be in use during sea conditions to be run and tested while on the trials, including heads and miscellaneous equipment throughout the Vessel to be sure that they function normally under sea conditions.

Speed trials will be conducted at 100-rpm intervals from idle to 75% load. Above 75% load, speed trials will be conducted at 50-rpm intervals. For each setting, two (2) runs will be made in opposite directions over a reciprocal course to account for any wind, waves or current. Speed will be determined by measuring the time to cover a set distance as determined by the vessel's GPS.

A minimum of one hour of trials shall be conducted at night, commencing no earlier than 1 hour after sunset, at maximum possible operating speed, to determine if visibility, reflections, night backlighting, or fogging issues are present on the bridge and to correct them.

Additional trials may be required if the conditions are not favorable due to excessive wind or waves.

Lubricating oils from all diesels and gearboxes shall be sampled for analysis after trials.

The CONTR shall be responsible for all costs associated with Sea Trials including provision of crew, fuel oil, lube oil, water provisions and any instrumentation or other test equipment required.

Any defects found during the Sea Trials shall be corrected by the CONTR at their own expense and demonstrated to the OWNER prior to OWNER's authorization for delivery. At its sole discretion, OWNER may authorize delivery prior to correction of defects found during the Sea Trials. CONTR must correct any such defects as a condition of ~~**Operational**~~ **Final** Acceptance.

983 DELIVERY

Contractor may not commence delivery of the Vessel from its location until OWNER has approved all dock trials and sea trials required to take place at Contractor's location. Contractor may not commence delivery until OWNER has issued an Authorization for Delivery to the Contractor. Delivery will be considered complete after OWNER conducts a post-delivery inspection and will be acknowledged by OWNER's issuance of a Post-Delivery Receipt. Delivery does not constitute Acceptance, nor does delivery include a transfer of any risk of loss or transfer of title.

Insurance during Delivery. The Contractor retains full responsibility, including risk of loss or damage to the Vessel, until ~~**Operational**~~ **Final** Acceptance. Contractor is responsible for providing all necessary insurance, security, safety maintenance and operation of the Vessel at all time, including during delivery. The Contractor must procure and maintain and provide proof of insurance against any loss of or damage to the vessel or personal injury or death or

damage to or loss of property caused during the delivery voyage including without limitation full form hull and machinery insurance in an amount equal to the Total Contract Price, and full form protection and indemnity insurance. Such insurance and proof must be at the Contractor's sole expense, including all deductibles. WETA must be named as an additional insured under any such insurance.

Protection of Vessel during Delivery. The Contractor is fully responsible for adequately preparing the Vessel for open ocean and local transport. Whenever the Contractor sails the Vessel under its own power, the Vessel must be under the command of an experienced Captain, holding a valid USCG license with a rating acceptable for the delivery voyage from the Contractor's facility. During the voyage, in addition to the licensed Captain, there must be no less than one senior deckhand and three other deckhands onboard the Vessel at all times. All deckhands, including the senior deckhand, shall meet the minimum requirements of the USCG, Navigation and Vessels Inspection Circular (NVIC) No. 1-91. Additionally, the Contractor must provide WETA with a letter from the Local Officer In Charge of Marine Inspection (OCMI) that the Captain holds a license with the necessary endorsement to sail the vessel on the intended voyage. The Contractor shall submit all required vessel movement reports to the cognizant USCG officials

Damage to Vessel During Delivery. Contractor must report to WETA any allision, collision, grounding, or other incident that may have caused damage to the Vessel during the delivery voyage. WETA may require that its representative be onboard at all times while the Vessel is underway. WETA's representative will not be in command of the Vessel.

993 MATERIAL HANDLING & REMOVAL

The CONTR shall be responsible for all material handling, wrapping, packing, crating, trucking, freight, shipping, and transportation charges in connection with this Work. This includes shipment of spare components back to the OWNER'S facility in California. The CONTR shall also pay for all shipping costs associated with the new subcomponents, equipment or machinery.

CONTR shall be responsible for the proper disposal of all wastes generated within its facility during the course of the Work.

APPENDIX B1 SHORESIDE INTERFACES
APPENDIX B2 WETA STD DETAILS
APPENDIX B3 INTERIOR OUTFITTING
APPENDIX B4 MASTER EQUIPMENT LIST
APPENDIX B5 MOORING INTERFACE
APPENDIX B6 SIGNAGE
APPENDIX B7 EXTERIOR GRAPHICS

REVISIONS

REV	ZONE	DESCRIPTION	BY	DATE	APPROVED
1	ALL	INITIAL WORKING RELEASE	CNS (AMD)	4/15/2020	CNS (AMD)
2	24–A	ADDED GENERAL NOTES TO JASON'S CRADLE DETAIL	CNS (AMD)	5/18/2020	CNS (AMD)
2	SHEET 4	PUMP COUPLING CHANGE, PUMP MOUNT DEFINITION, TOLERANCE ON OVERBOARD ANGLE, NOTES	CNS (AMD)	5/19/2020	CNS (AMD)

GENERAL NOTES

1. ALL STANDARD DETAILS ARE TO BE ADAPTED TO THE CONTR'S VESSEL DESIGN.
2. ALL FINAL DETAILS OF THE ADAPTATION/INTEGRATION OF THESE STANDARD DETAILS WILL BE SUBJECT TO REVIEW AND APPROVAL OF THE OWNER IN THE DETAILED ENGINEERING AND DESIGN PHASE OF THE PROJECT.
3. REFERENCE THE CONTRACT DOCUMENTS FOR ADDITIONAL CLARIFICATIONS AND REQUIREMENTS FOR EACH SPECIFIC PROJECT.

TABLE OF CONTENTS

WETA | WATER EMERGENCY TRANSPORTATION AUTHORITY

PROJECT: RFP 19–013				DRAWN BY: CNS (AMD)
TITLE: APPENDIX B2 STANDARD DETAILS BOOKLET		TOLERANCES (UNLESS OTHERWISE SPECIFIED) WHOLE DIMENSIONS ±1/8" FRACTIONAL DIMENSIONS ±1/16" ANGLES ±1°		CHECKED BY: CNS (AMD) DATE: 4/15/2020
DWG NO: WETA–STD–B2	ISSUE: 2	SCALE: AS NOTED	SIZE: A	SHEET: 1 OF 13

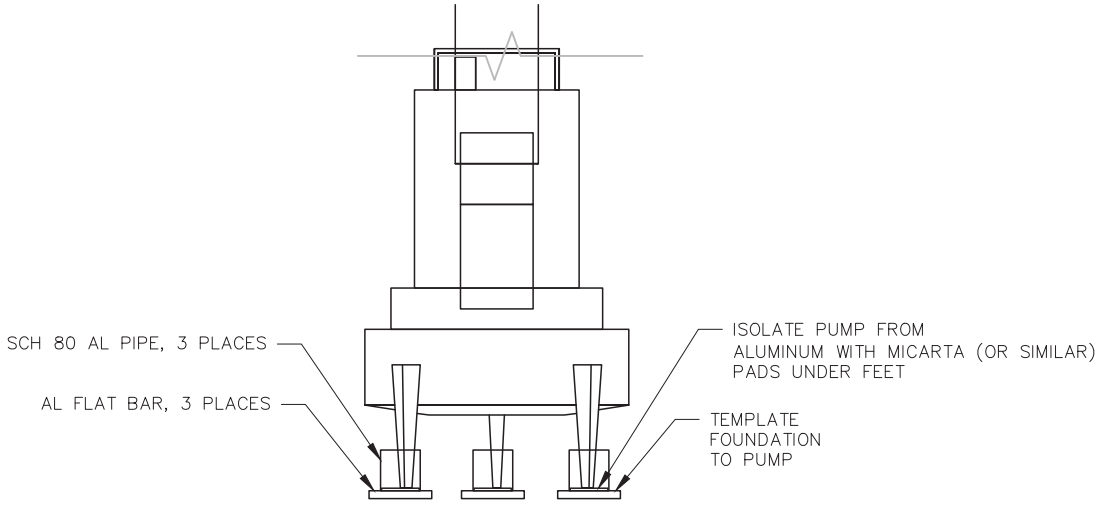

SEWAGE PUMP

FOUNDATION DETAIL

NOT TO SCALE

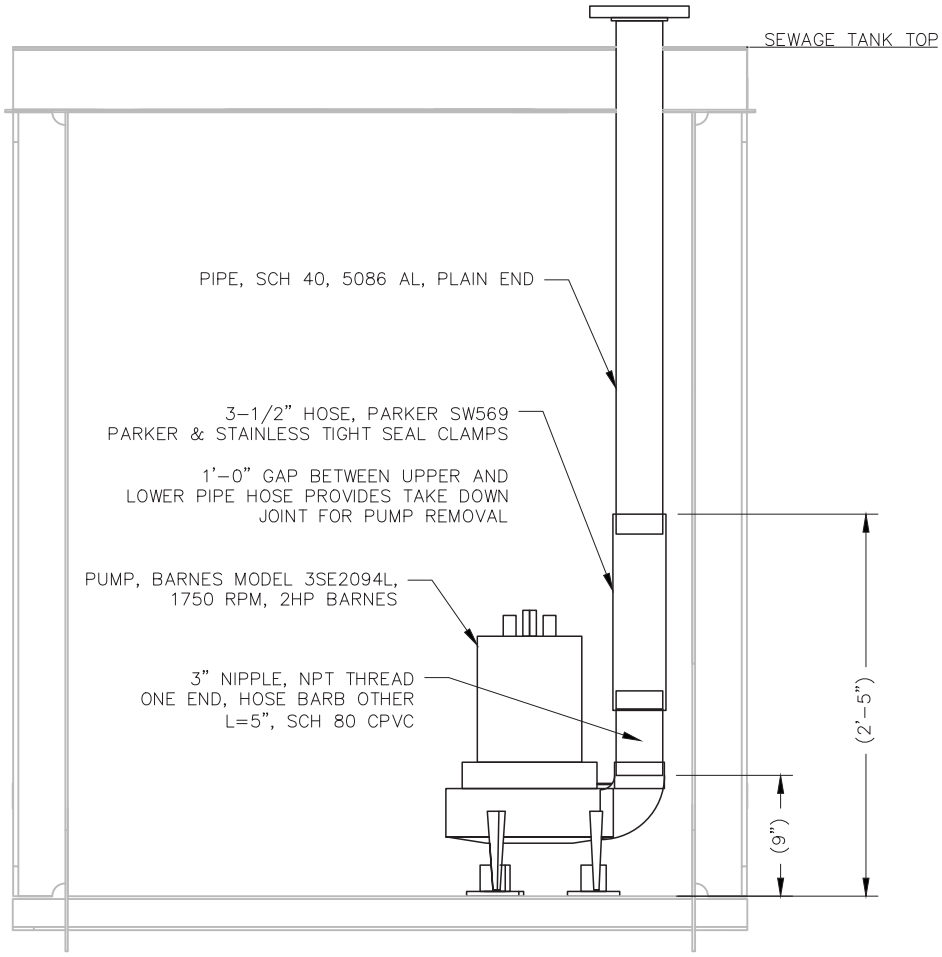

SEWAGE PUMP

INSTALLATION DETAIL

NOT TO SCALE

WETA

DWG NO:	ISSUE:	SCALE:	SIZE:	SHEET:
WETA-STD-B2	1	AS NOTED	A	2

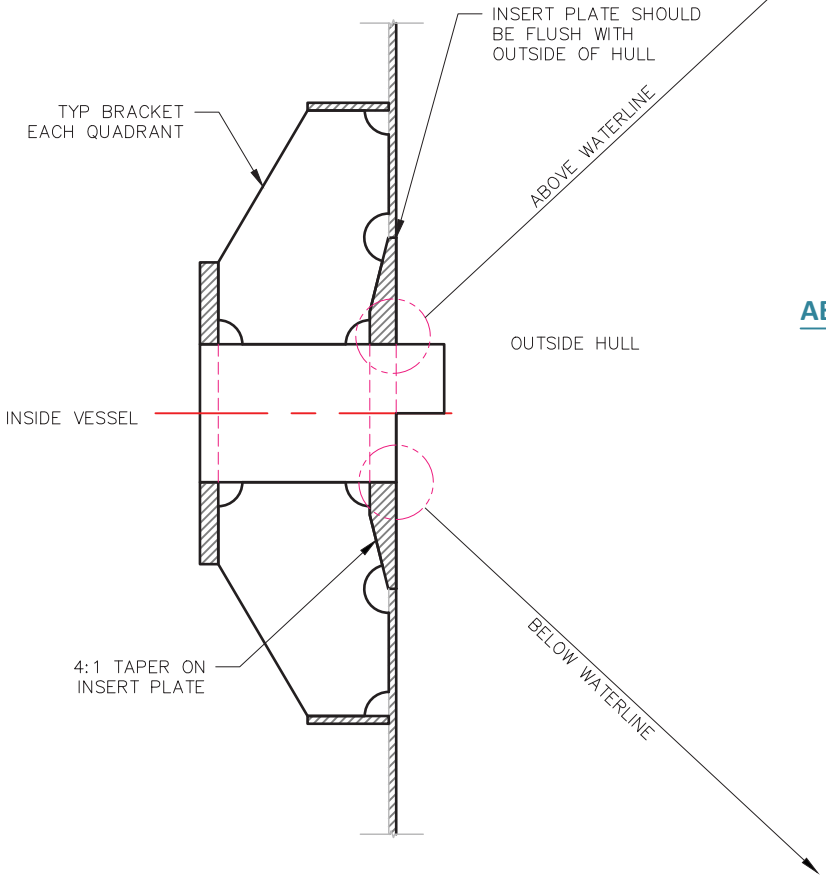

TYPICAL HULL PENETRATION

NOT TO SCALE

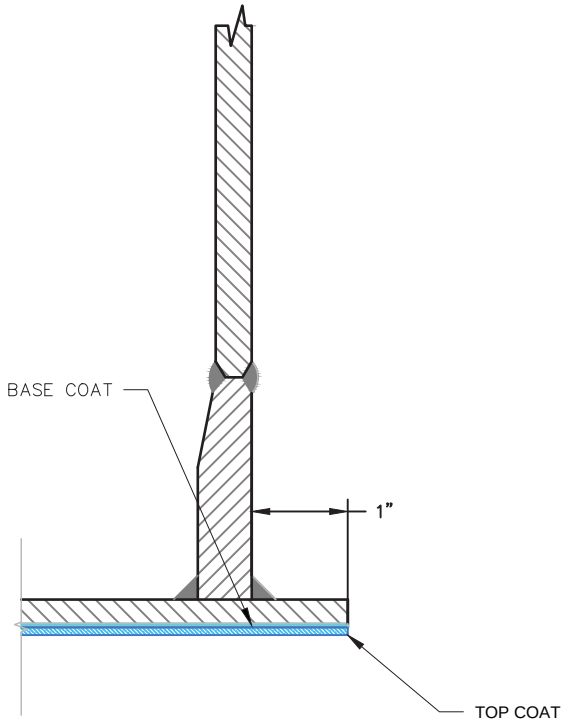

ABOVE WATERLINE COATING DETAIL

NOT TO SCALE

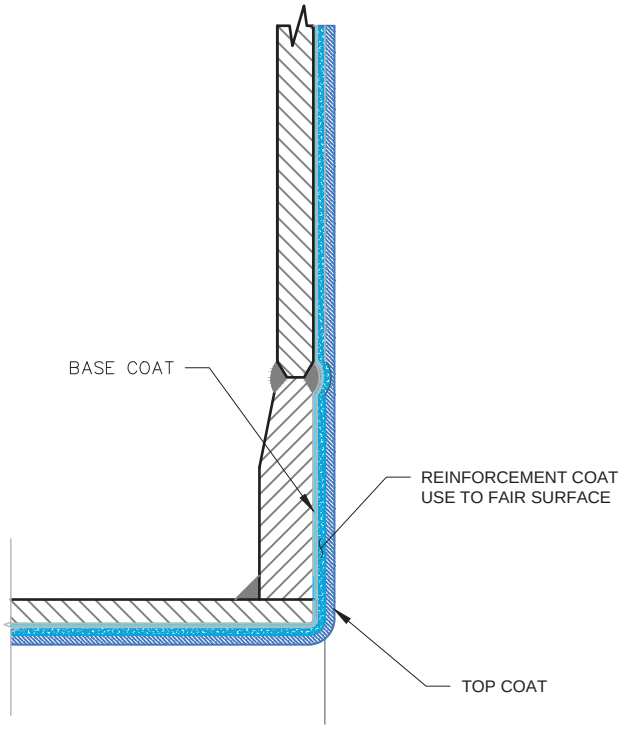

BELOW WATERLINE COATING DETAIL

NOT TO SCALE

WETA

DWG NO:	ISSUE:	SCALE:	SIZE:	SHEET:
WETA-STD-B2	1	AS NOTED	A	3

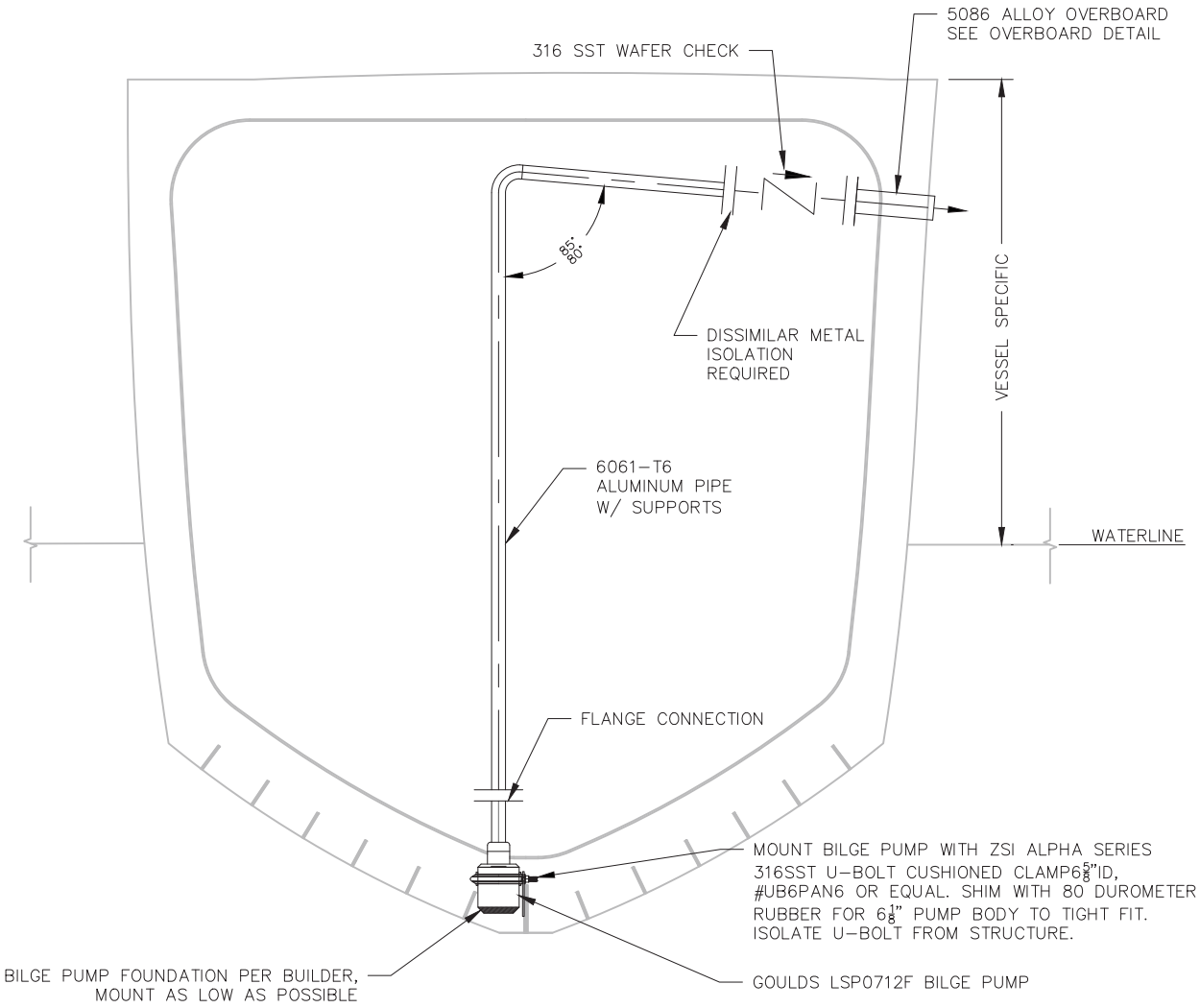

BILGE PUMP

INSTALLATION DETAIL

NOT TO SCALE

WETA

DWG NO:	ISSUE:	SCALE:	SIZE:	SHEET:
WETA-STD-B2	2	AS NOTED	A	4

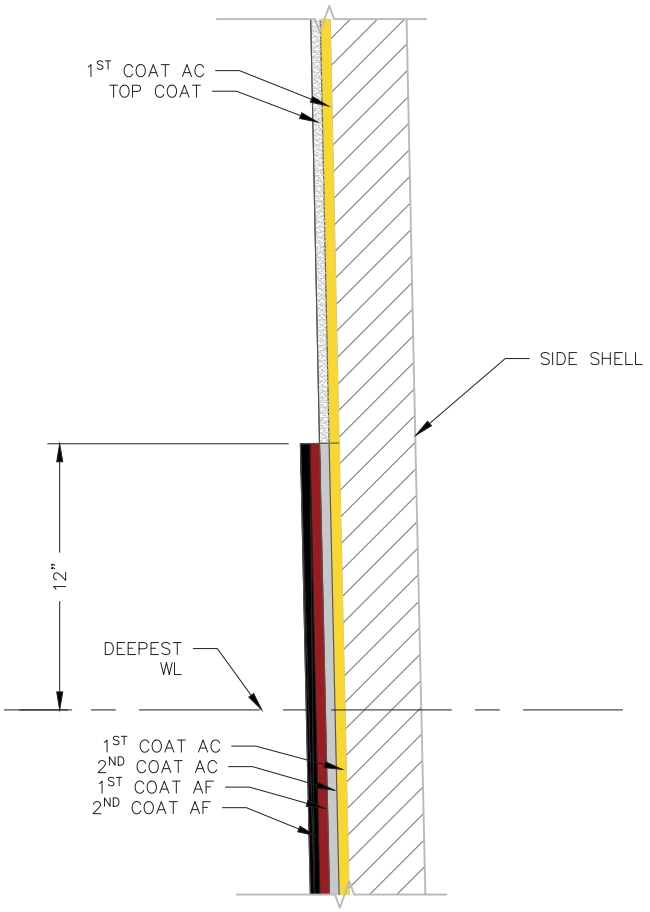

SIDE SHELL PAINT DETAIL

DRAWING NOT TO SCALE

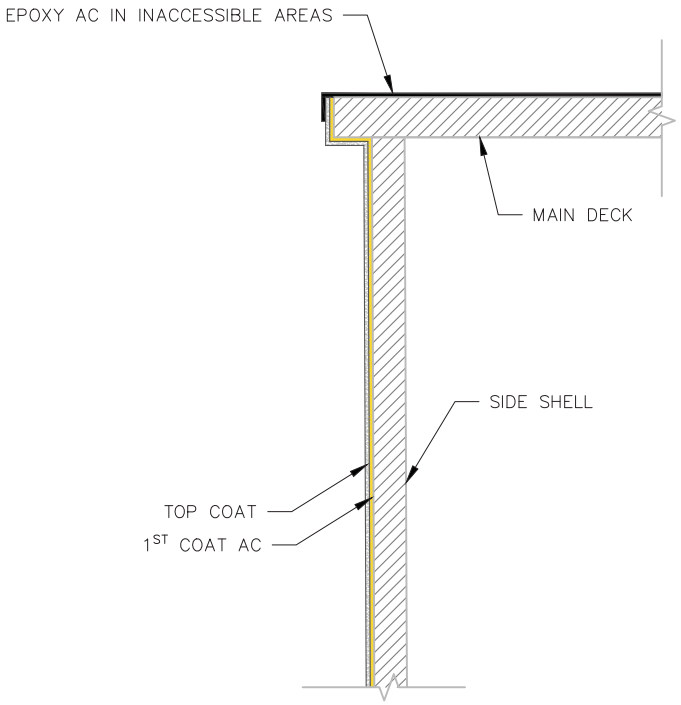

SHELL TO DECK PAINT DETAIL

OVERLAP EXAGGERATED, DRAWING NOT TO SCALE

WETA

DWG NO:	ISSUE:	SCALE:	SIZE:	SHEET:
WETA-STD-B2	1	AS NOTED	A	5

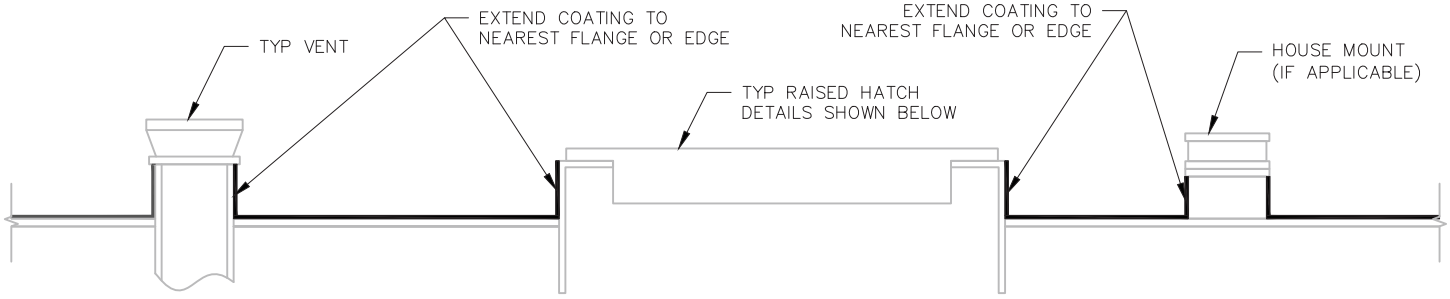

DECK COATING DETAIL

DRAWING NOT TO SCALE

WETA

DWG NO:	ISSUE:	SCALE:	SIZE:	SHEET:
WETA-STD-B2	1	AS NOTED	A	6

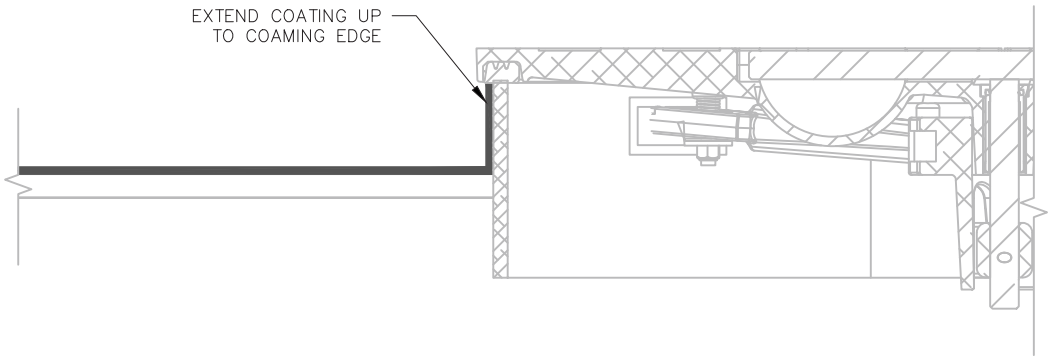

RAISED HATCH COATING DETAIL

DRAWING NOT TO SCALE

WETA

DWG NO:	ISSUE:	SCALE:	SIZE:	SHEET:
WETA-STD-B2	1	AS NOTED	A	7

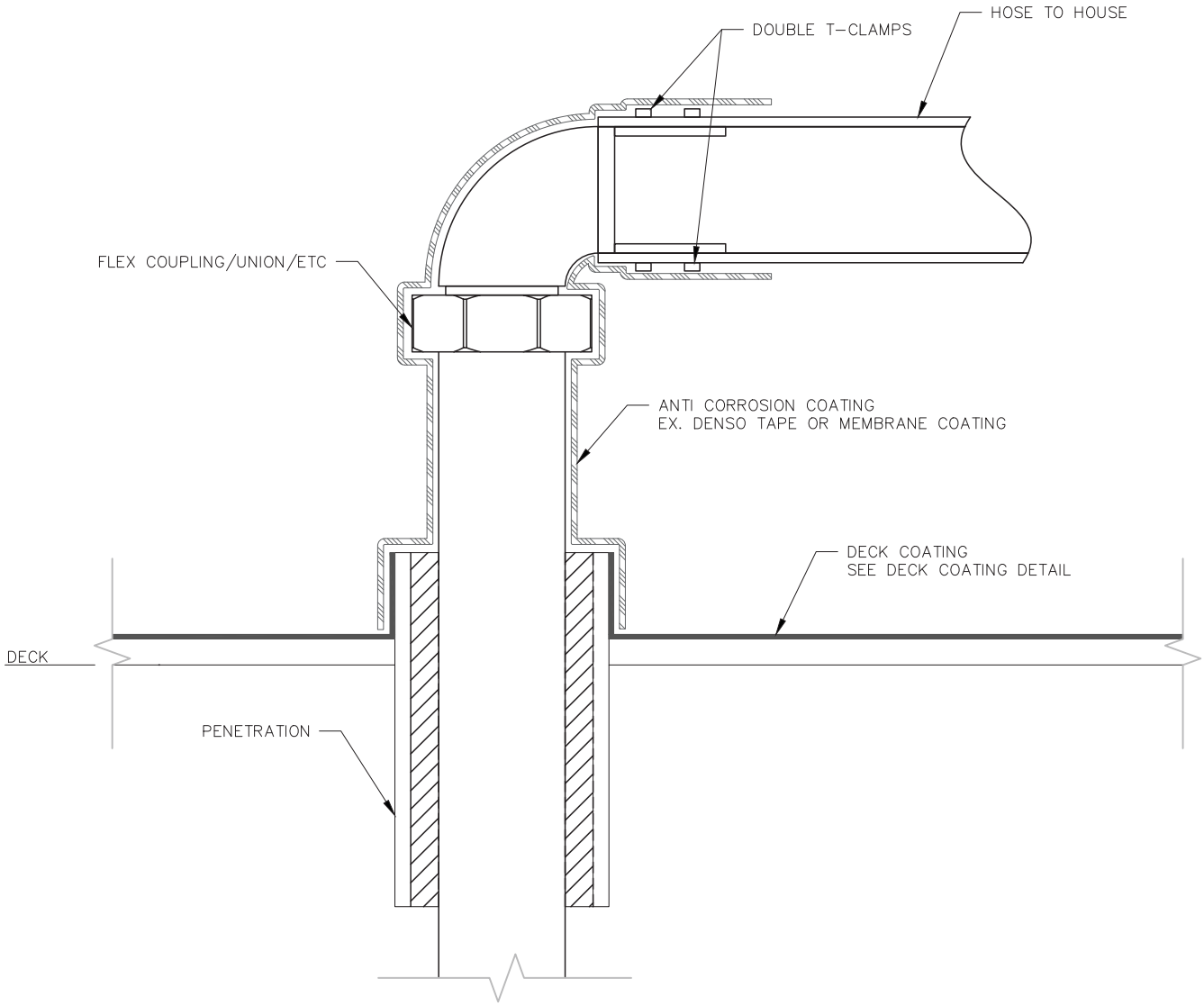

FLOATING HOUSE CONNECTIONS

OVERLAP EXAGGERATED

DRAWING NOT TO SCALE

WETA

DWG NO:	ISSUE:	SCALE:	SIZE:	SHEET:
WETA-STD-B2	1	AS NOTED	A	8

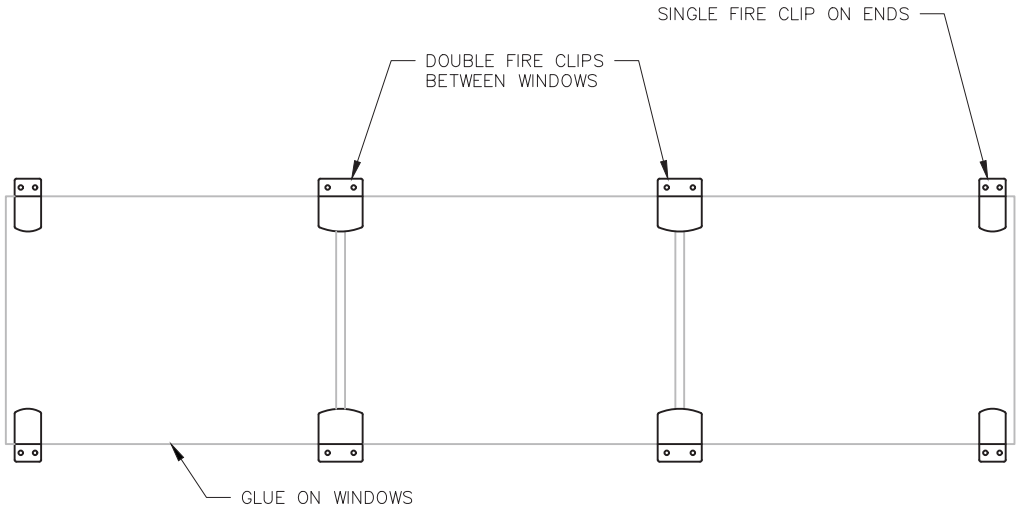

GLUE ON WINDOW DETAIL

TYPICAL FIRE CLIP INSTALLATION

NOT TO SCALE

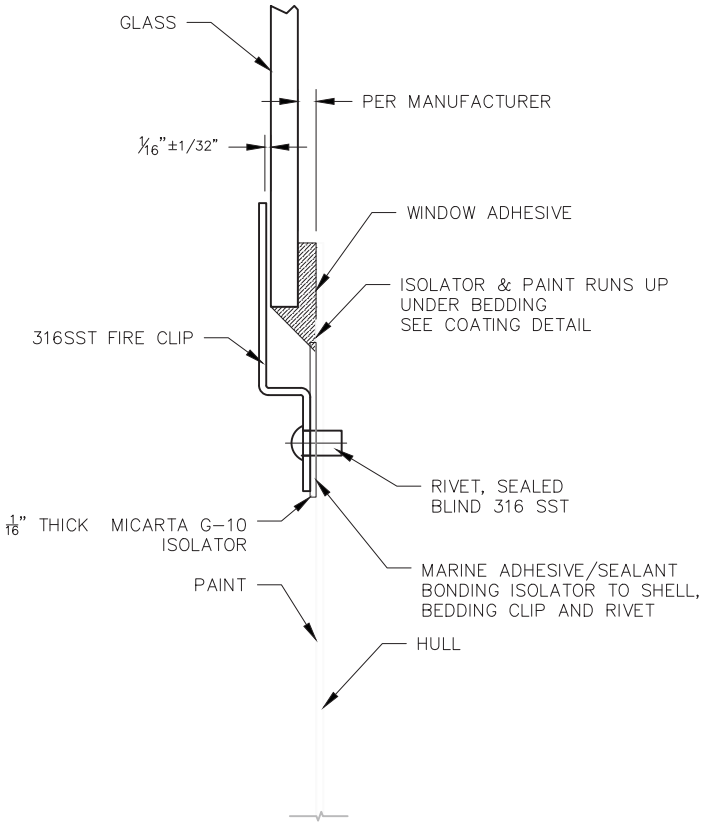

FIRE CLIP

TYPICAL SECTION

NOT TO SCALE

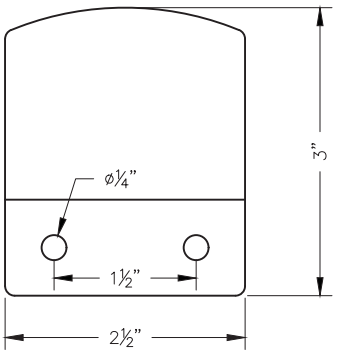

DOUBLE FIRE CLIP

NOT TO SCALE

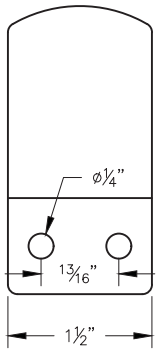

SINGLE FIRE CLIP

NOT TO SCALE

WETA

DWG NO:	ISSUE:	SCALE:	SIZE:	SHEET:
WETA-STD-B2	1	AS NOTED	A	9

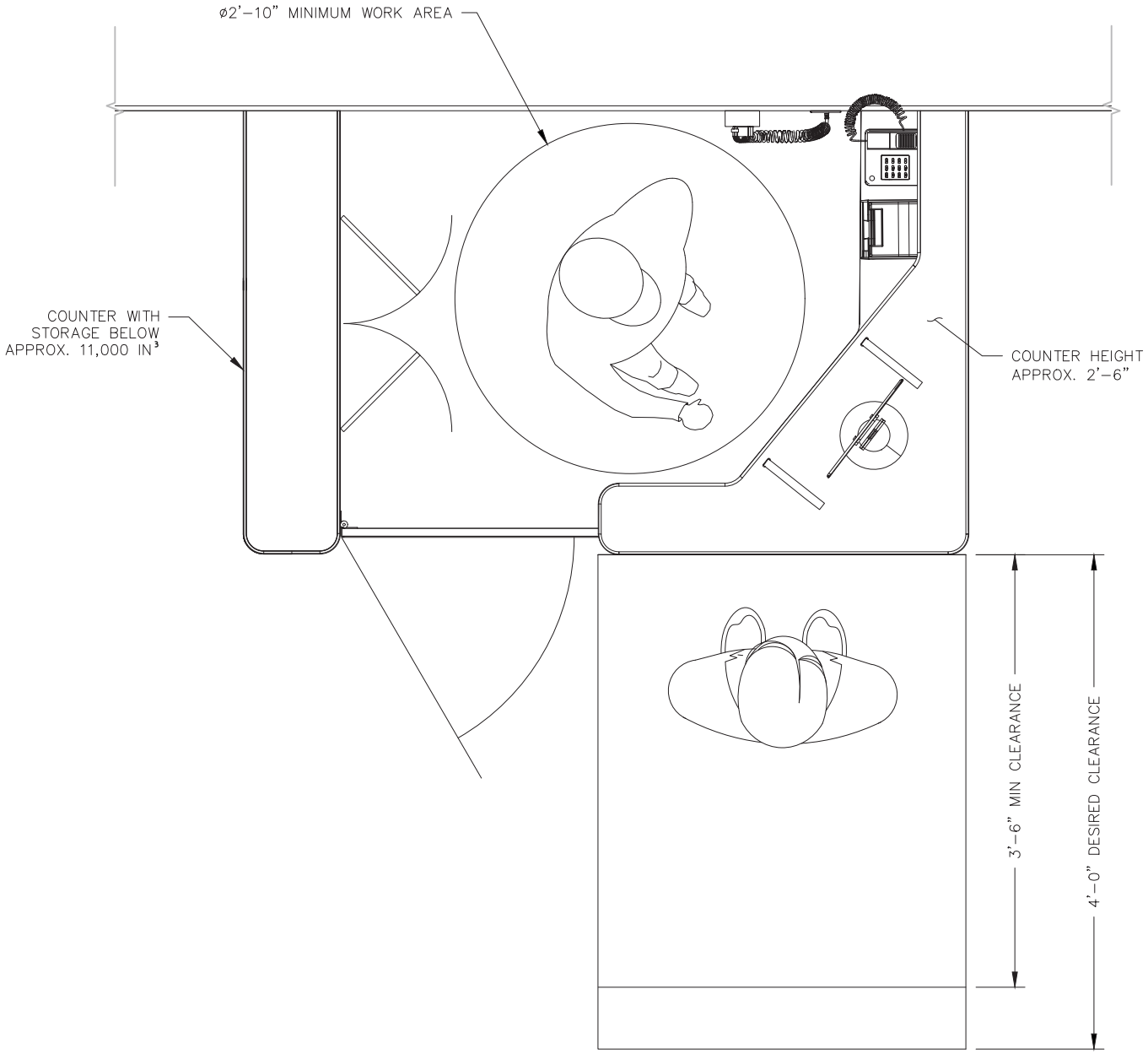

TICKET COUNTER DETAIL

PLAN VIEW

NOT TO SCALE

WETA

DWG NO:	ISSUE:	SCALE:	SIZE:	SHEET:
WETA–STD–B2	1	AS NOTED	A	10

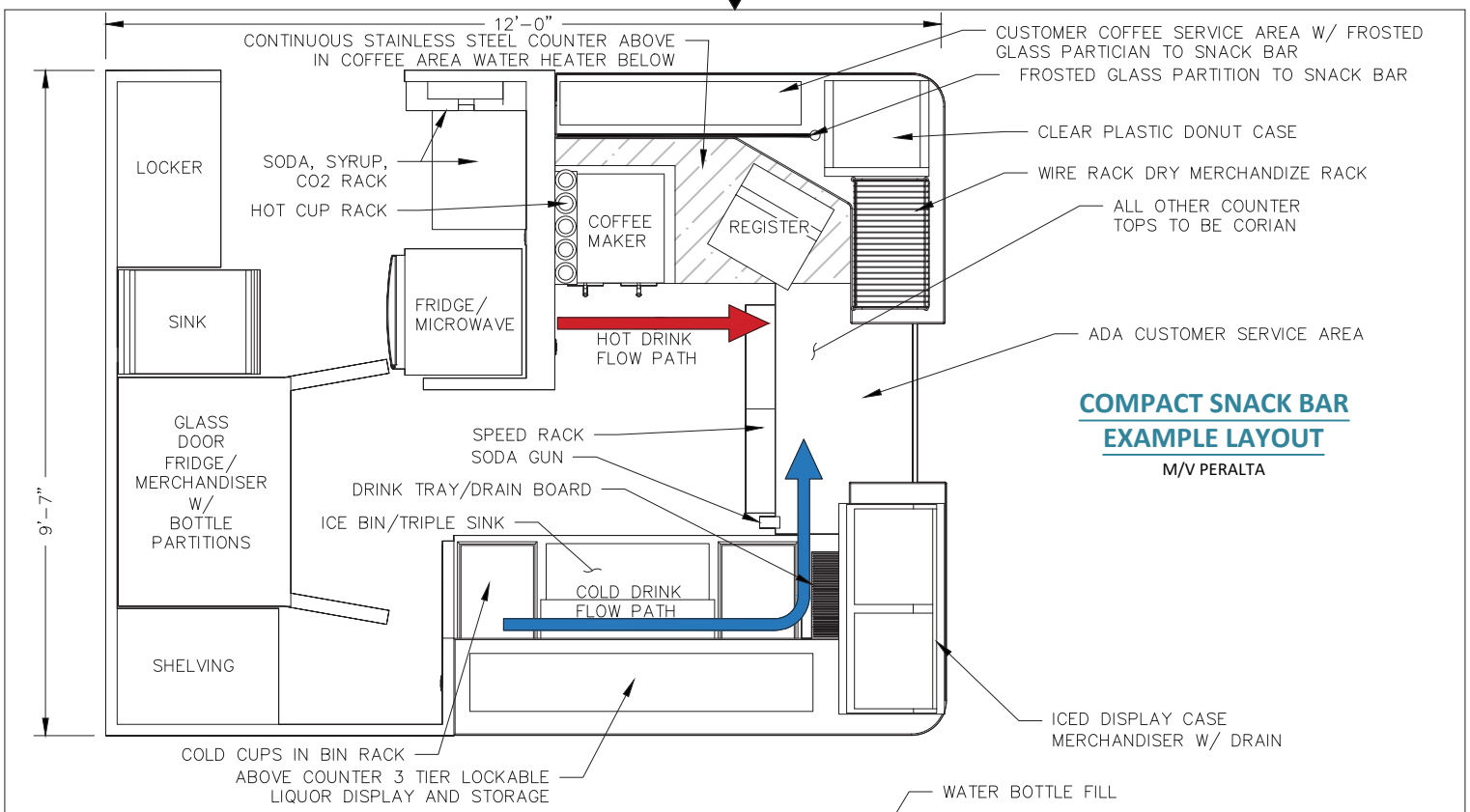

COMPACT SNACK BAR EXAMPLE LAYOUT

M/V PERALTA

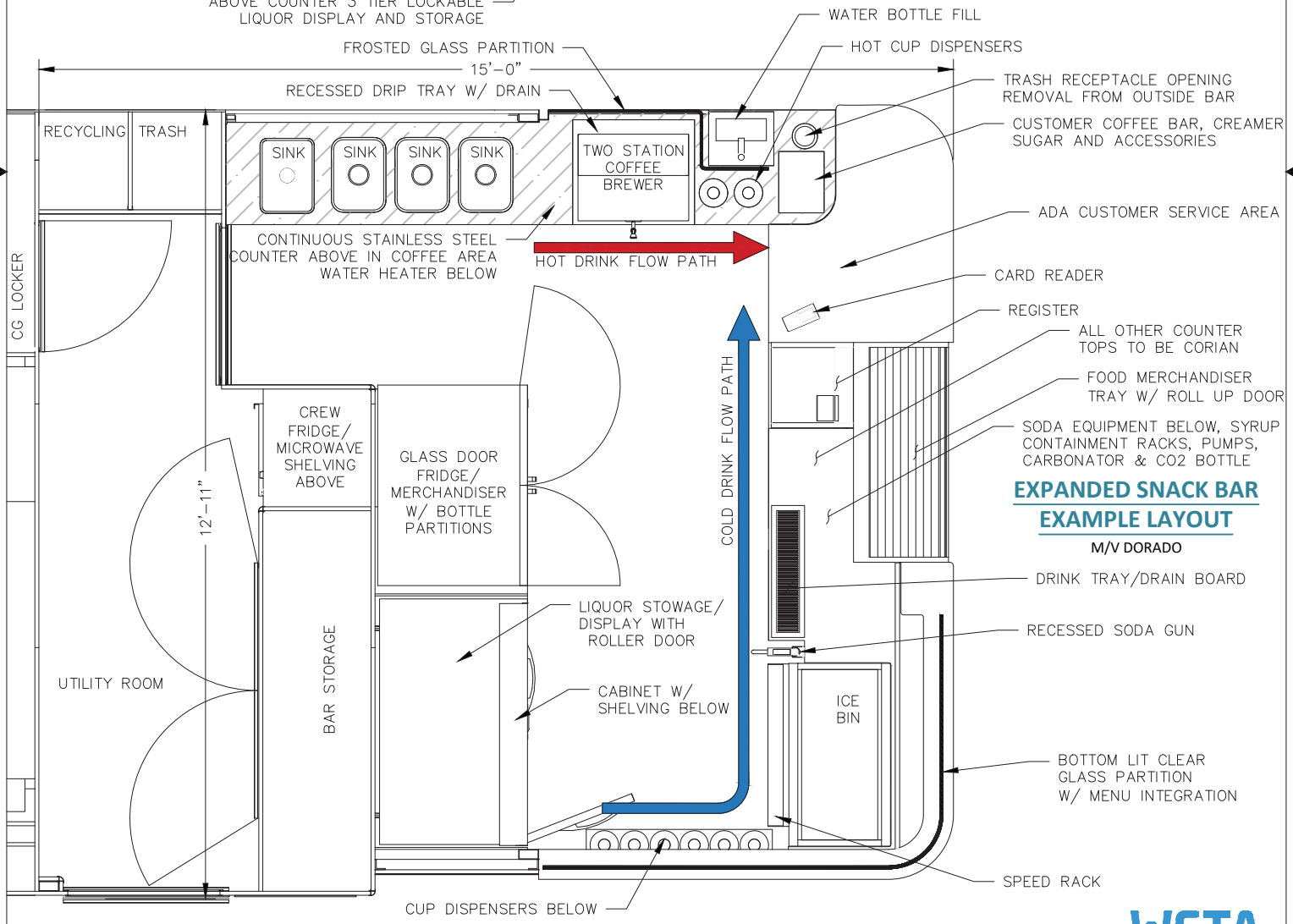

EXPANDED SNACK BAR EXAMPLE LAYOUT

M/V DORADO

WETA

DWG NO:	ISSUE:	SCALE:	SIZE:	SHEET:
WETA-STD-B2	1	AS NOTED	A	11

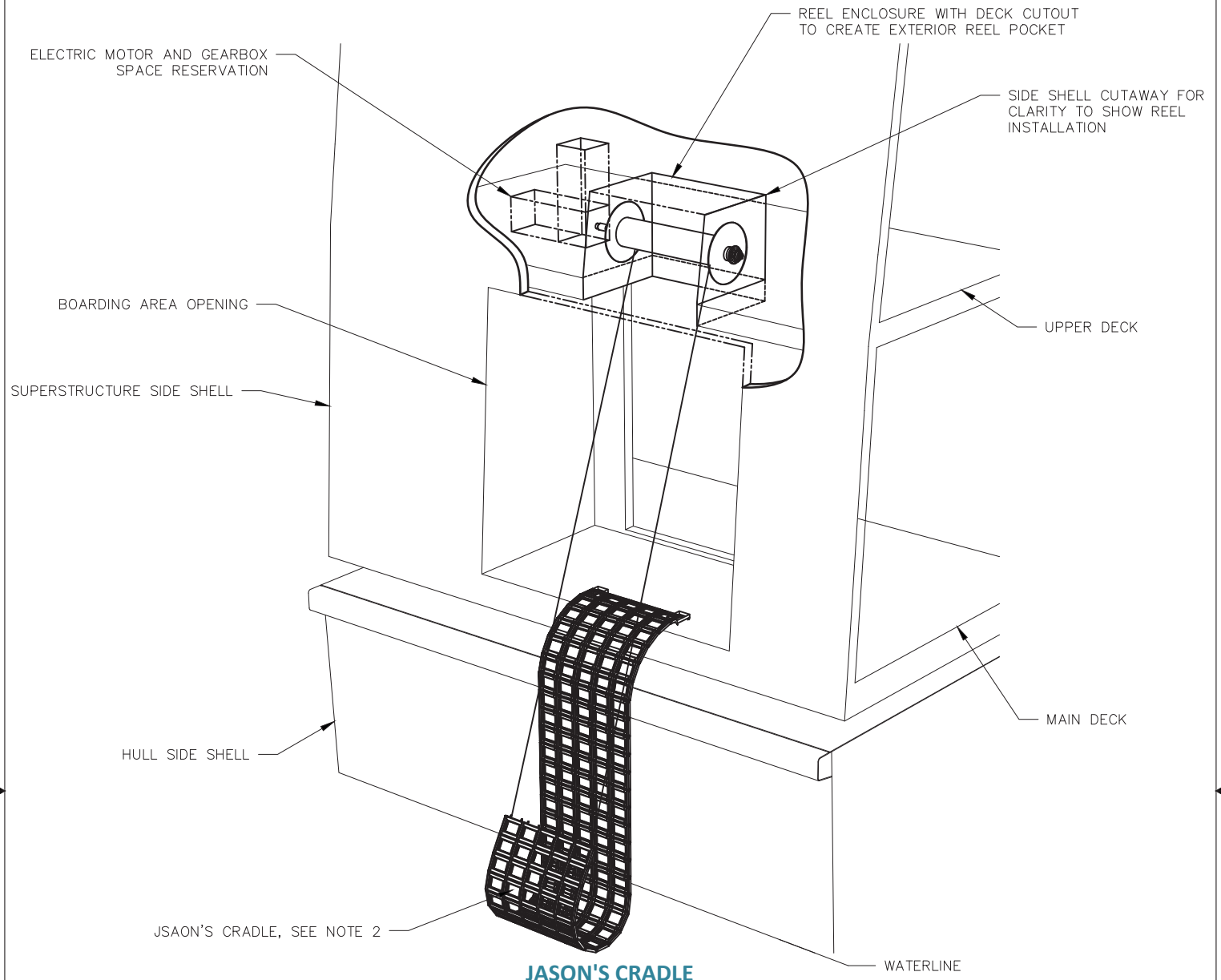

JASON'S CRADLE

AUTOMATED RECOVERY ARRANGEMENT

NOT TO SCALE

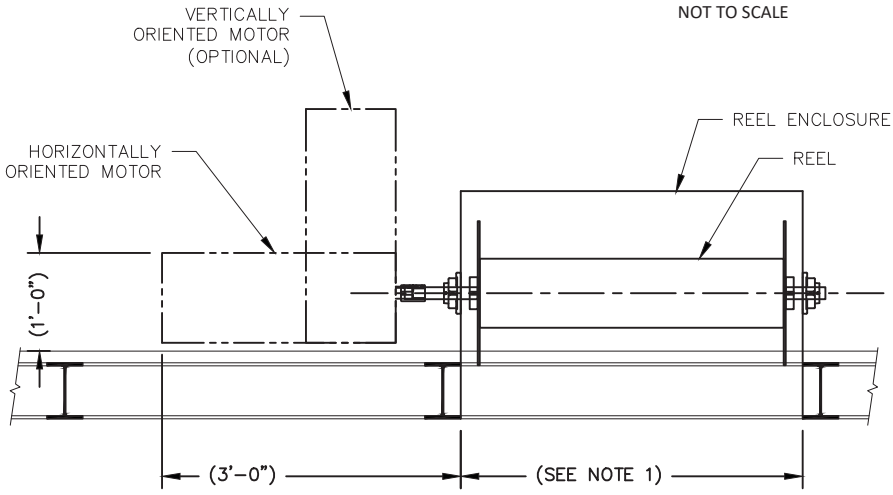

JASON'S CRADLE

LONGITUDINAL SECTION

NOT TO SCALE

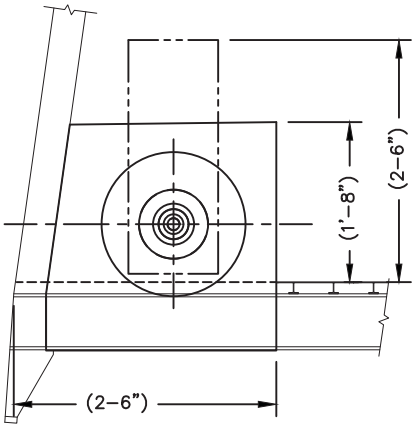

JASON'S CRADLE

TRANSVERSE SECTION

NOT TO SCALE

GENERAL NOTES

1. TYPICAL OPENING IN DECK IS ONE FRAME BAY (MIN. 1000mm)
2. JASON'S CRADLE MINIMUM WIDTH IS 880mm, 5 RUNG MODEL

WETA

DWG NO:	ISSUE:	SCALE:	SIZE:	SHEET:
WETA–STD–B2	2	AS NOTED	A	12

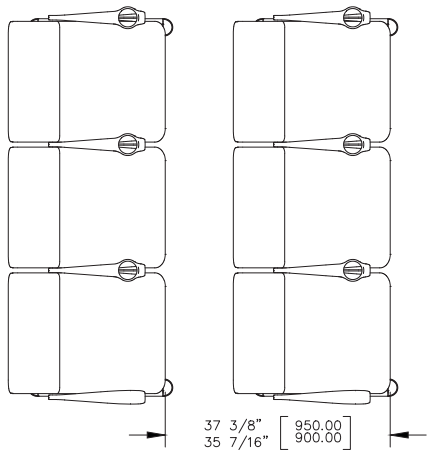

STANDARD SEATING ROW

MINIMUM SEATING PITCH 900mm, MAXIMUM SEATING PITCH 950mm. A SEATING PITCH OVER 950mm NEEDS TO CONFORM WITH USCG AISLEWAY REQUIREMENTS. SEATING PITCH REQUIREMENTS SUBJECT TO CHANGE WITH SEATING STYLE CHANGE. THESE REQUIREMENTS BASED OFF OF THE UES SEA FORCE SEATING

NOT TO SCALE

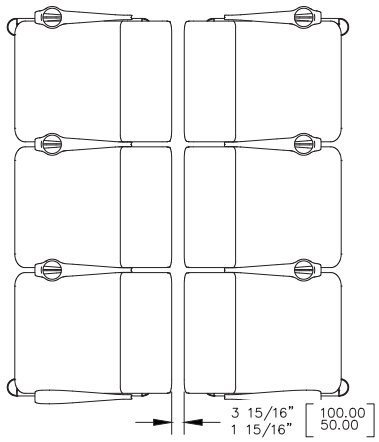

STANDARD SEAT BACK TO BACK

MINIMUM SEATING BACK TO BACK PITCH IS 50mm. MAXIMUM SEATING BACK TO BACK PITCH IS 100mm. BACK TO BACK SEATING PITCH GREATER THAN 100mm NEEDS TO BE EVALUATED FOR SAFETY. SEATING PITCH REQUIREMENTS SUBJECT TO CHANGE WITH SEATING STYLE CHANGE. THESE REQUIREMENTS BASED OFF OF THE UES SEA FORCE SEATING

NOT TO SCALE

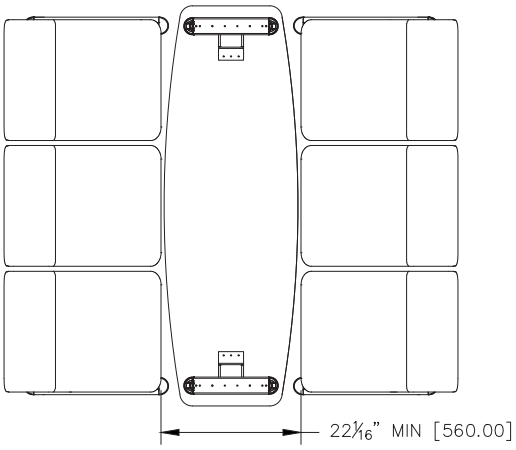

STANDARD TABLE SEATING

THE SEATING PITCH FOR TABLES ARE MEASURED FROM THE FRONT OF THE SEAT TO THE FRONT OF THE OPPOSITE SEAT. MINIMUM SPACING IS 560mm WITH NO SIDE ARMREST. SEATING PITCHES AT 580mm MAY USE SIDE ARMRESTS. LARGER SEATING PITCH SPACING THAN MINIMUM SHALL BE REVIEWED INDIVIDUALLY FOR TABLE WIDTH AND ARMREST INCLUSION. . THESE REQUIREMENTS BASED OFF OF THE UES SEA FORCE SEATING

NOT TO SCALE

WETA

DWG NO:	ISSUE:	SCALE:	SIZE:	SHEET:
WETA-STD-B2	1	AS NOTED	A	13